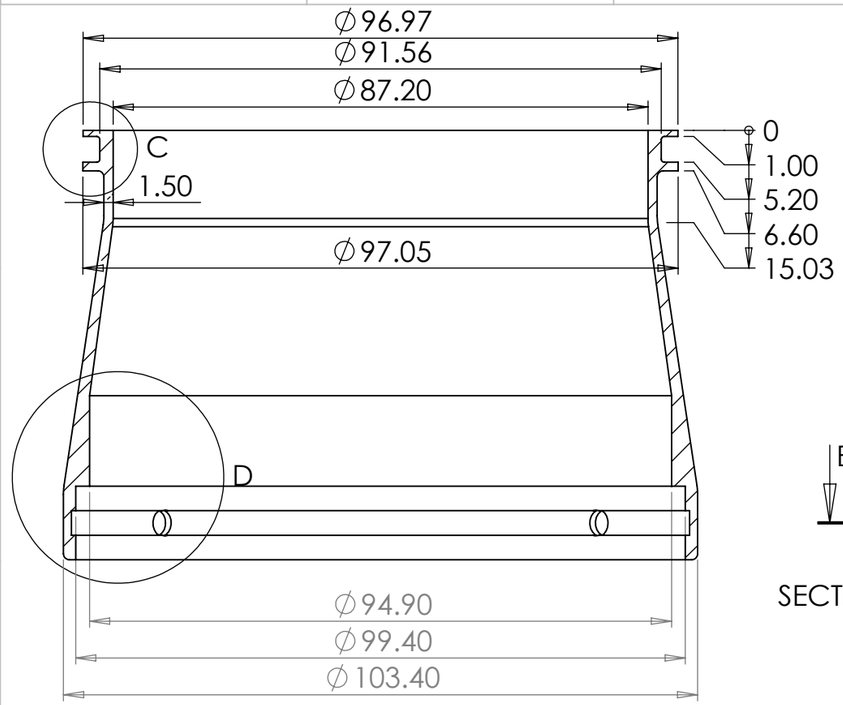

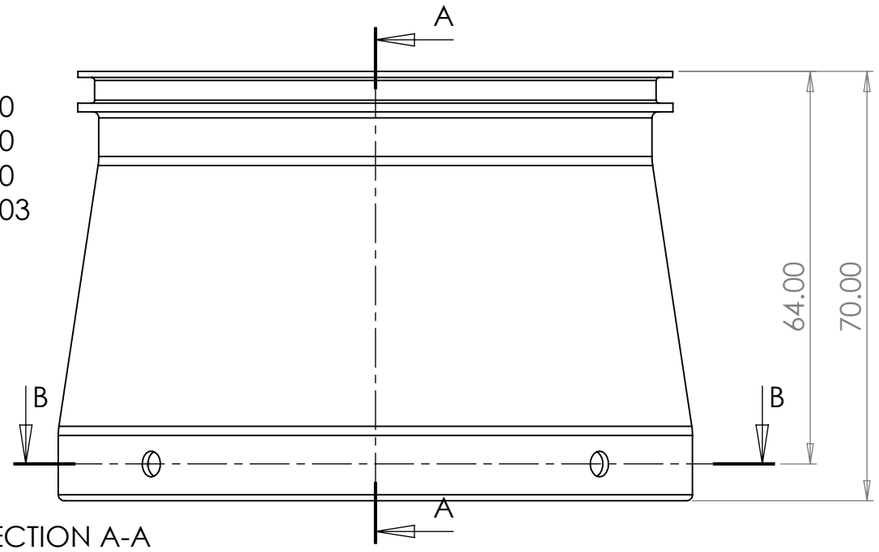

SECTION A-A

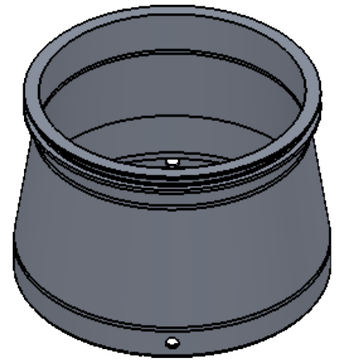

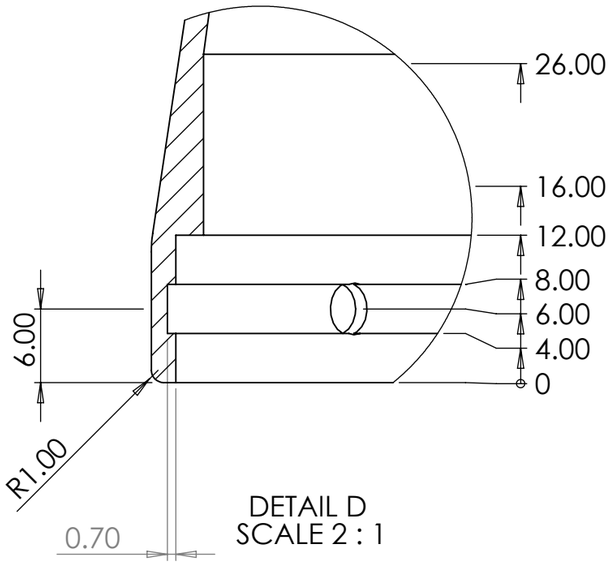

DETAIL D
SCALE 2 : 1

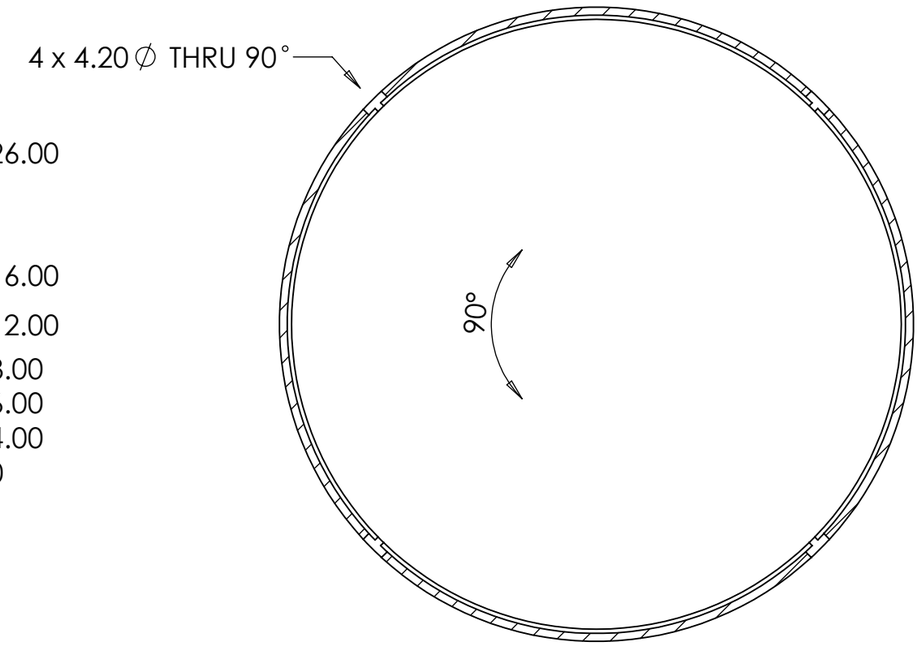

SECTION B-B

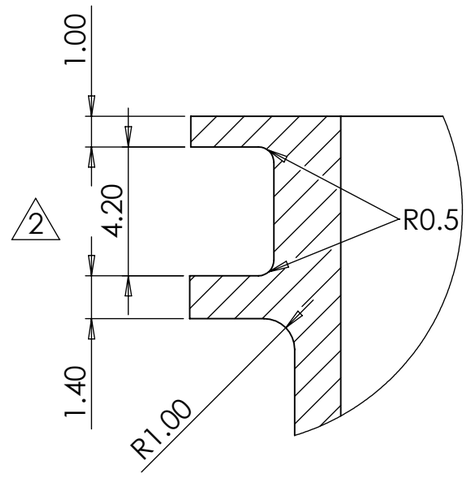

DETAIL C
SCALE 5 : 1

UN-ANODIZED PART #: R01SE6244
ANODISED PART #: R01SE6242

PRODUCTION\QUALITY SIGN OFF:	SIMON FARREN	
COSTING\SPECIFICATION SIGN OFF:	SIMON FARREN	

A3 SHEET 1 OF 1

ISS:	DESCRIPTION:	INITIALS:	E.C.N. NO:	DATE:
1	Original issue	BM		19/01/2015
2	O-Ring area dims changed to OEM spec	JC		21/01/2020
3	Box entry bore changed from 100.3 to 99.4mm	JC		11/03/2020

ALL DIMENSIONS IN MILLIMETERS

TOLERANCES (AT 20°C) UNLESS OTHERWISE STATED

NOMINAL LINEAR DIMENSIONS

OVER-INCL	< 0.00	0.00
0-200	+/- 0.50	+/- 0.15
250-1000	+/- 1.00	+/- 0.20
1000 PLUS	+/- 2.00	+/- 0.30

SURFACE FINISHES:

MILLING N8
TURNING N7
GRINDING N6

ANG DIMS +/- 0.5'

REMOVE ALL BURRS AND SHARP EDGES UNLESS OTHERWISE STATED

HOLES TO BS4500 1985.

THREADS TO BS3643 1981 METRIC COURSE.

BSP THREADS TO BS 2779 MED FIT

THIS A DRAWING IS A PRIVATE AND CONFIDENTIAL COMMUNICATION

REVERIE

Reverie Ltd
Unit 2 Chandlers Row
Colchester
Essex
CO1 2HG
01206 866663
www.reverie.ltd.uk

DRAWN: BM	APP:	**PART NO(S).:** R01SE6242, R01SE6244
DATE: 19/01/2015		**TITLE:** WIGGINS PLENUM INLET ADAPTOR 3.5" (BASED ON ES903-56)
FINISH: SEE DRAWING		**CUSTOMER:** N/A
SCALE: DO NOT SCALE		**MATERIAL:** ALLOY
		INSPECTION GRADE: A-1 **PART QUALITY:** B
WEIGHT: -		**DRG. NO.:** R01SE6242, R01SE6244