NOTES:
- PART IS SYMMETRICAL SO CAN BE TURNED AROUND TO CHANGE THE ANGLE
- SEE SHEET 2 FOR DETAILED HOLE POSITIONS

R01SE0753
30 to 10mm WIDTH ANGLE

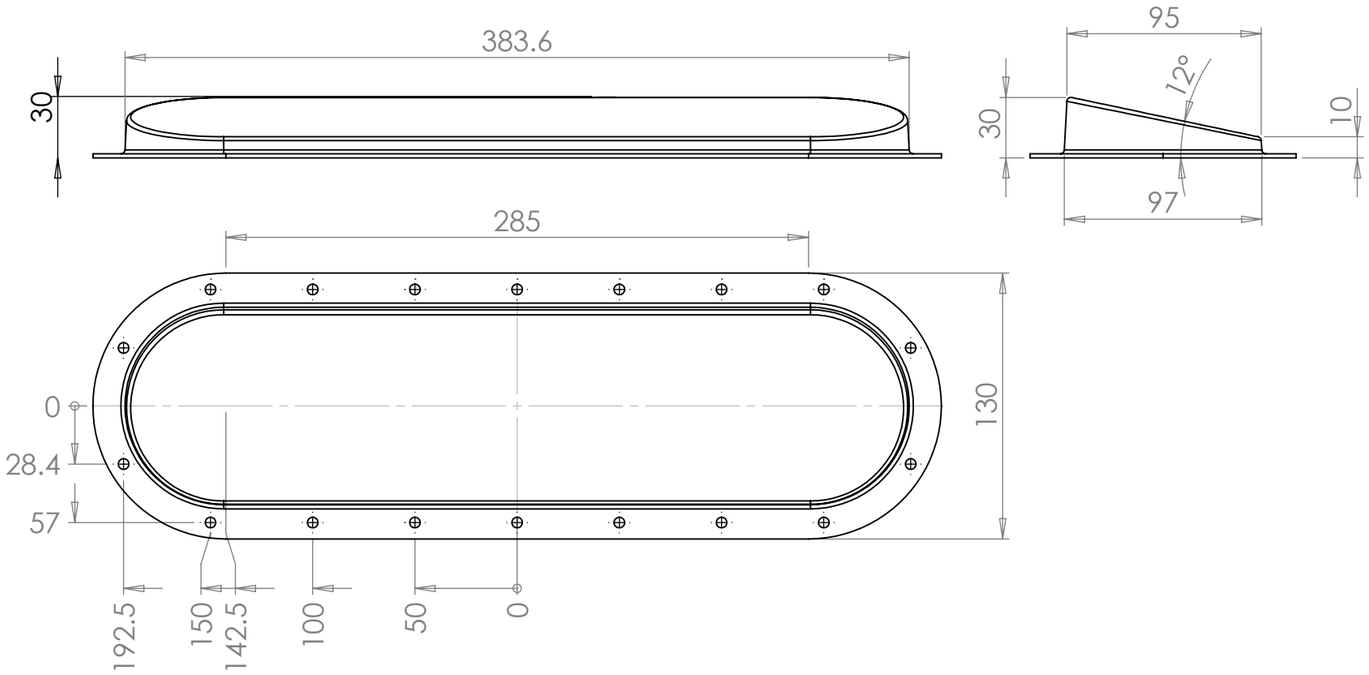

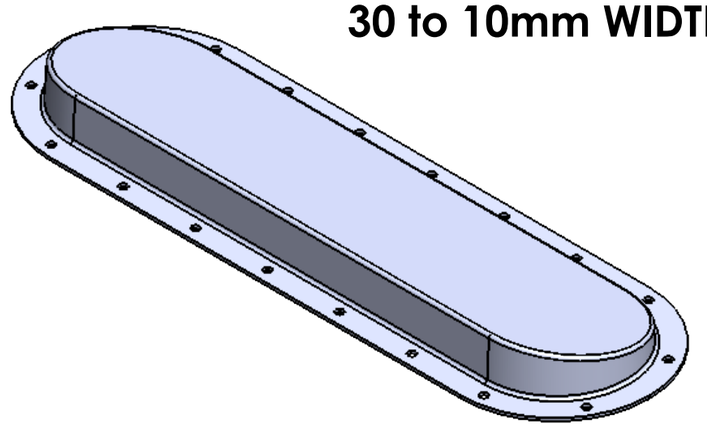

R01SE0754
30 to 10mm LENGTH ANGLE

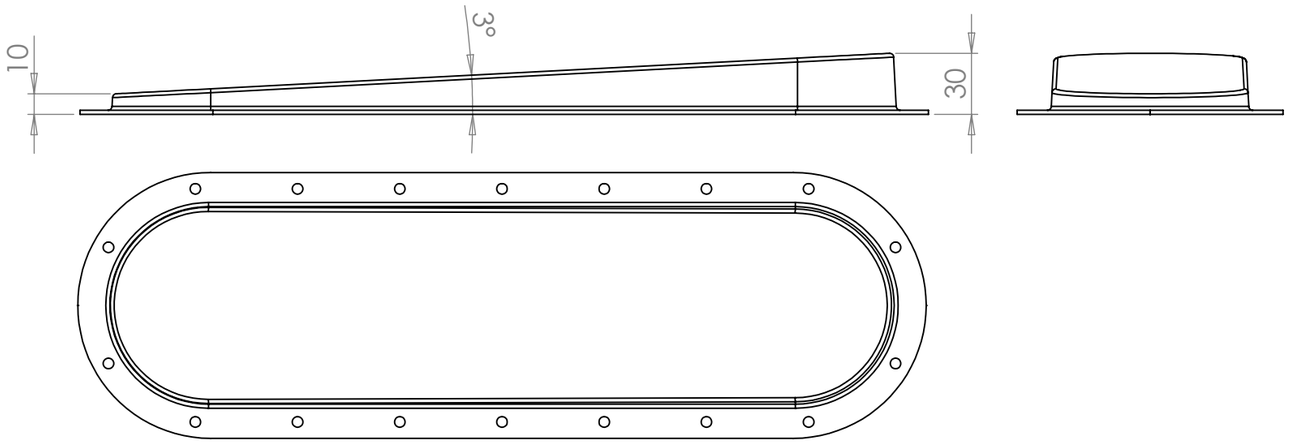

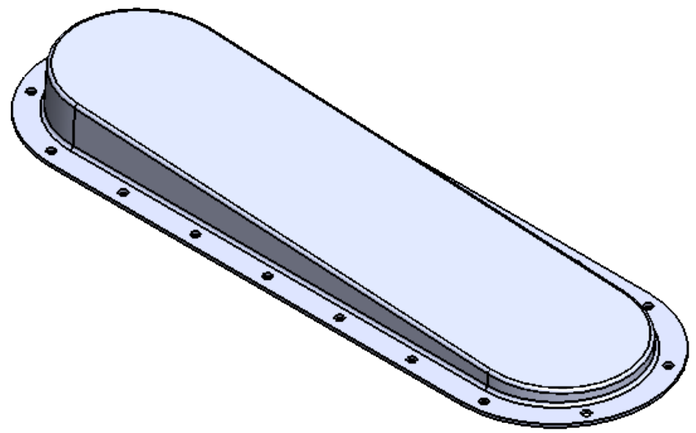

PRODUCTION\QUALITY SIGN OFF:	SIMON FARREN		A3	SHEET 1 OF 4
COSTING\SPECIFICATION SIGN OFF:	SIMON FARREN			

ISS:	DESCRIPTION:	INITIALS:	E.C.N. NO:	DATE:
1	Original issue	JC		29/09/2020

ALL DIMENSIONS IN MILLIMETERS

TOLERANCES (AT 20°C) UNLESS OTHERWISE STATED

NOMINAL LINEAR DIMENSIONS		
OVER-INCL	< 0.00	0.00
0-200	+/- 0.50	+/- 0.15
250-1000	+/- 1.00	+/- 0.20
1000 PLUS	+/- 2.00	+/- 0.30

SURFACE FINISHES:
MILLING N8
TURNING N7
GRINDING N6

ANG DIMS +/- 0.5°

REMOVE ALL BURRS AND SHARP EDGES UNLESS OTHERWISE STATED

HOLES TO BS4500 1985.

THREADS TO BS3643 1981 METRIC COURSE.

BSP THREADS TO BS 2779 MED FIT

THIS A DRAWING IS A PRIVATE AND CONFIDENTIAL COMMUNICATION

REVERIE
Reverie Ltd
Unit 2 Chandlers Row
Colchester
Essex
CO1 2HG
01206 866663
www.reverie.ltd.uk

DRAWN: CA	APP:	PART NO(S).: R01SE0753 R01SE0754
DATE: 29/09/2020		TITLE: ZOLDER 30 to 10mm ANGLED BACK PLATE (WIDTH/LENGTH)
FINISH: SEE DRAWING		CUSTOMER: N/A
SCALE: DO NOT SCALE		MATERIAL: C/FIBRE
		INSPECTION GRADE: A-1 PART QUALITY: B
WEIGHT: -		DRG. NO.: R01SE0753 R01SE0754

NOTES:
- PART IS SYMMETRICAL SO CAN BE TURNED AROUND TO CHANGE THE ANGLE
- SEE SHEET 1 FOR DETAILED HOLE POSITIONS

R01SE0745
60 to 15mm WIDTH ANGLE

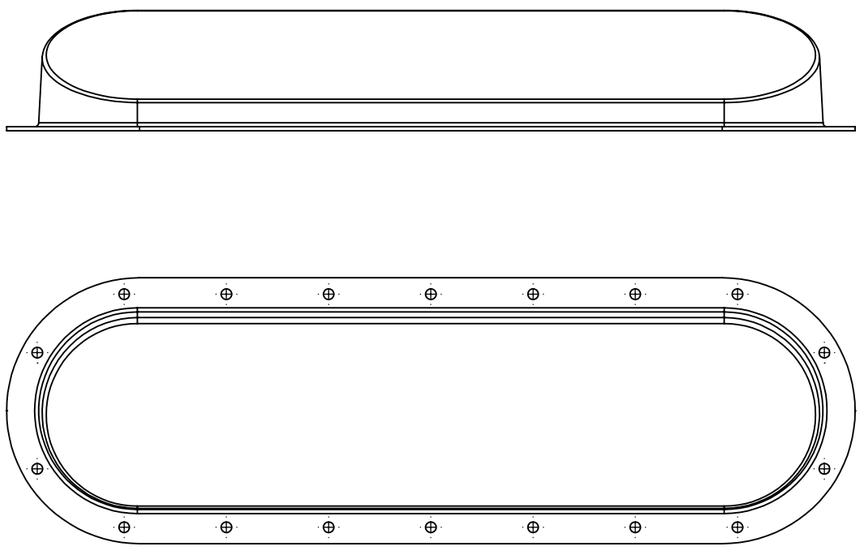

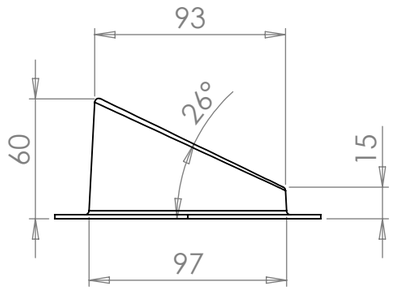

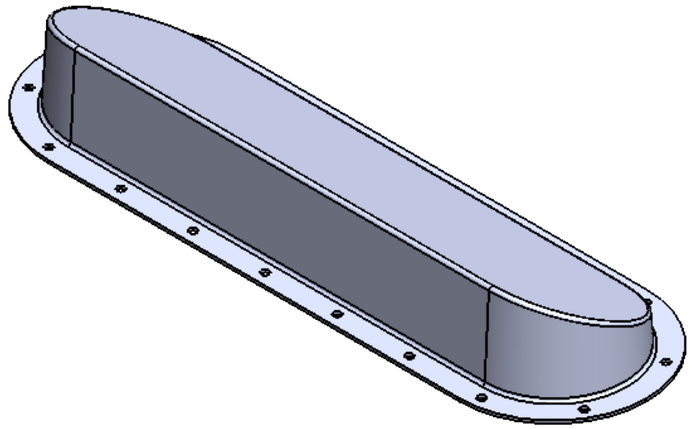

R01SE0746
60 to 15mm LENGTH ANGLE

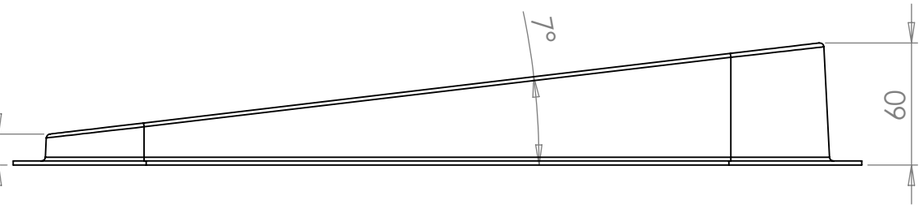

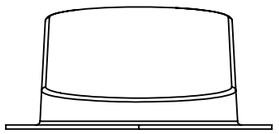

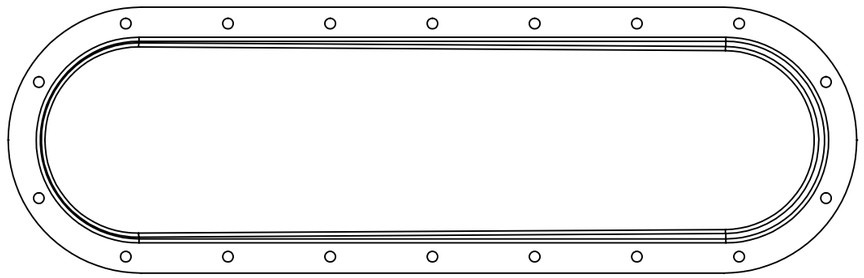

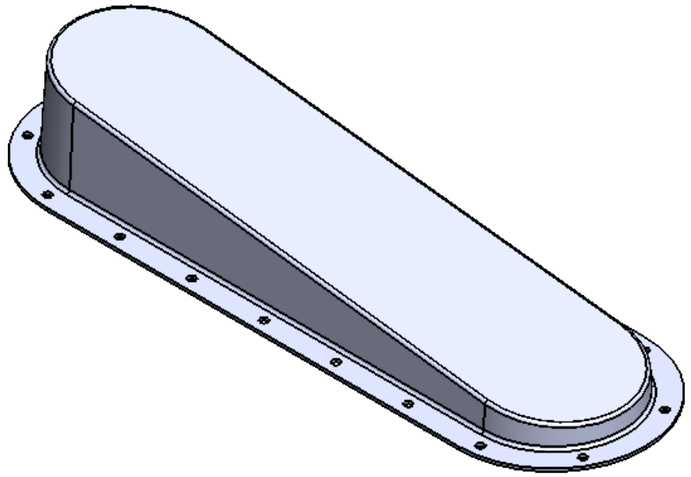

PRODUCTION\QUALITY SIGN OFF:	SIMON FARREN		A3	SHEET 2 OF 4
COSTING\SPECIFICATION SIGN OFF:	SIMON FARREN			

ISS:	DESCRIPTION:	INITIALS:	E.C.N. NO:	DATE:
1	Original issue	JC		29/09/2020

ALL DIMENSIONS IN MILLIMETERS

TOLERANCES (AT 20°C) UNLESS OTHERWISE STATED

NOMINAL LINEAR DIMENSIONS		
OVER-INCL	< 0.00	0.00
0-200	+/- 0.50	+/- 0.15
250-1000	+/- 1.00	+/- 0.20
1000 PLUS	+/- 2.00	+/- 0.30

SURFACE FINISHES:
MILLING N8
TURNING N7
GRINDING N6

ANG DIMS +/- 0.5'

REMOVE ALL BURRS AND SHARP EDGES UNLESS OTHERWISE STATED

HOLES TO BS4500 1985.

THREADS TO BS3643 1981 METRIC COURSE.

BSP THREADS TO BS 2779 MED FIT

THIS A DRAWING IS A PRIVATE AND CONFIDENTIAL COMMUNICATION

REVERIE

Reverie Ltd
Unit 2 Chandlers Row
Colchester
Essex
CO1 2HG
01206 866663
www.reverie.ltd.uk

DRAWN: CA	APP:	PART NO(S).: R01SE0753 R01SE0754
DATE: 29/09/2020		TITLE: ZOLDER 60 to 15mm ANGLED BACK PLATE (WIDTH/LENGTH)
FINISH: SEE DRAWING		CUSTOMER: N/A
SCALE: DO NOT SCALE		MATERIAL: C/FIBRE
		INSPECTION GRADE: A-1 PART QUALITY: B
WEIGHT: -		DRG. NO.: R01SE0745 R01SE0746

NOTES:
- PART IS SYMMETRICAL SO CAN BE TURNED AROUND TO CHANGE THE ANGLE
- SEE SHEET 1 FOR DETAILED HOLE POSITIONS

R01SE0755
60 to 15mm WIDTH ANGLE

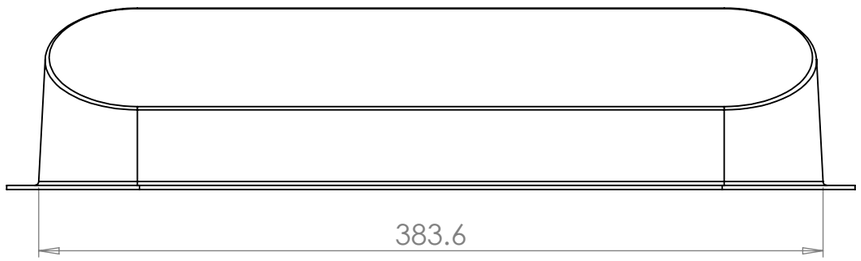

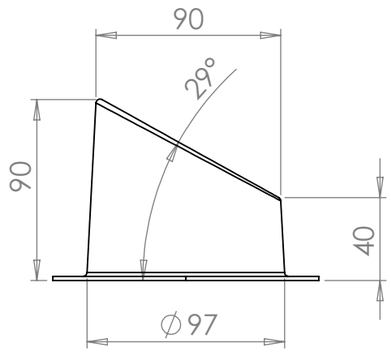

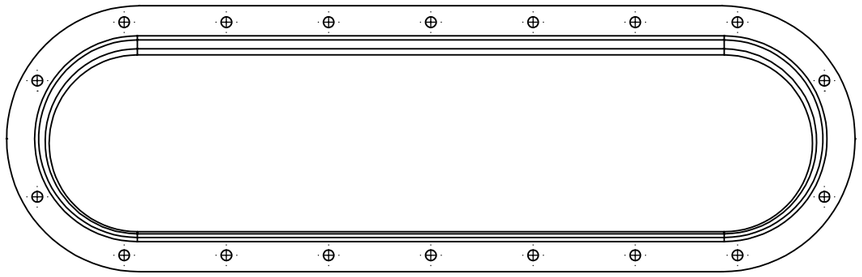

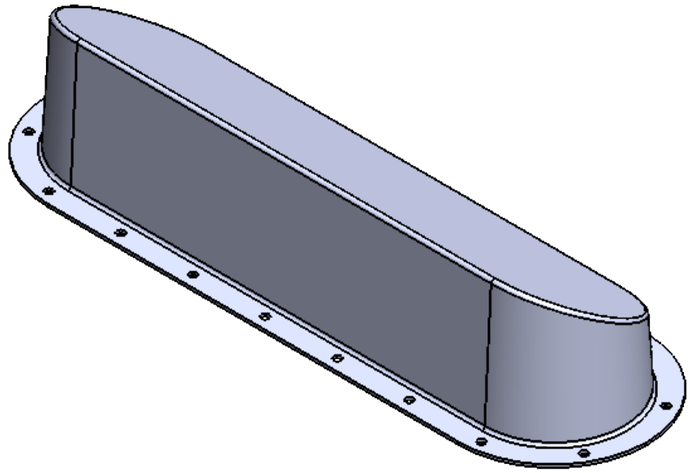

R01SE0756
60 to 15mm LENGTH ANGLE

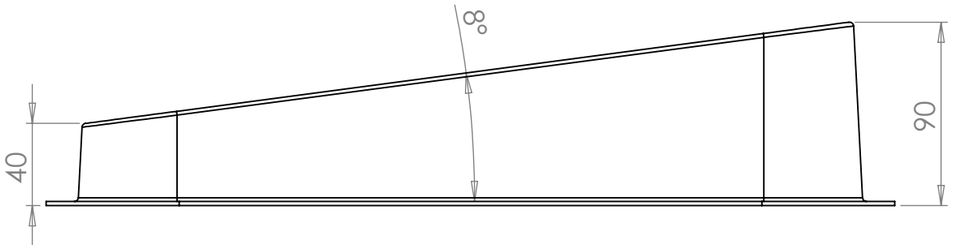

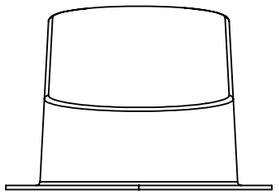

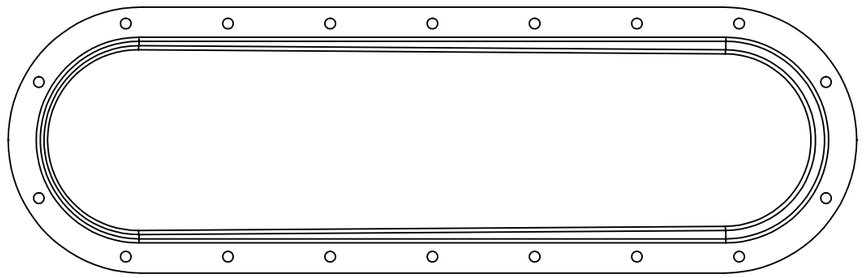

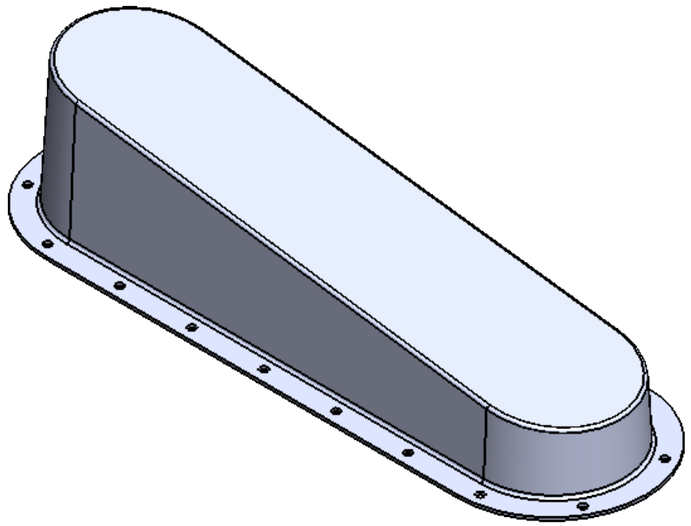

PRODUCTION\QUALITY SIGN OFF:	SIMON FARREN	
COSTING\SPECIFICATION SIGN OFF:	SIMON FARREN	

A3 SHEET 3 OF 4

ISS:	DESCRIPTION:	INITIALS:	E.C.N. NO:	DATE:
1	Original issue	JC		29/09/2020

ALL DIMENSIONS IN MILLIMETERS

TOLERANCES (AT 20°C) UNLESS OTHERWISE STATED

NOMINAL LINEAR DIMENSIONS		
OVER-INCL	< 0.00	0.00
0-200	+/- 0.50	+/- 0.15
250-1000	+/- 1.00	+/- 0.20
1000 PLUS	+/- 2.00	+/- 0.30

SURFACE FINISHES:
MILLING N8
TURNING N7
GRINDING N6

ANG DIMS +/- 0.5'

REMOVE ALL BURRS AND SHARP EDGES UNLESS OTHERWISE STATED

HOLES TO BS4500 1985.

THREADS TO BS3643 1981 METRIC COURSE.

BSP THREADS TO BS 2779 MED FIT

THIS A DRAWING IS A PRIVATE AND CONFIDENTIAL COMMUNICATION

REVERIE

Reverie Ltd
Unit 2 Chandlers Row
Colchester
Essex
CO1 2HG
01206 866663
www.reverie.ltd.uk

DRAWN: CA	APP:
DATE: 29/09/2020	
FINISH: SEE DRAWING	
SCALE: DO NOT SCALE	
WEIGHT: -	

PART NO(S).: R01SE0755 R01SE0756

TITLE: ZOLDER 90 to 40mm ANGLED BACK PLATE (WIDTH/LENGTH)

CUSTOMER: N/A

MATERIAL: C/FIBRE

INSPECTION GRADE: A-1 **PART QUALITY:** B

DRG. NO.: R01SE0755 R01SE0756

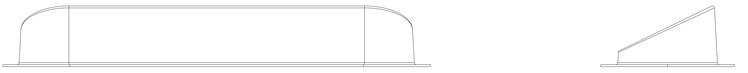

R01SE0745

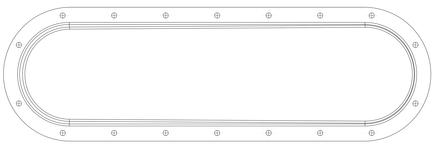

R01SE0746

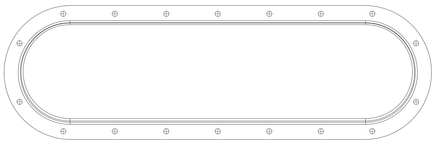

R01SE0753

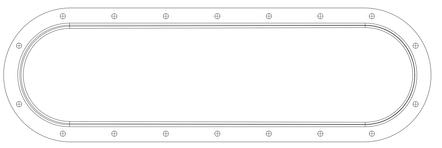

R01SE0754

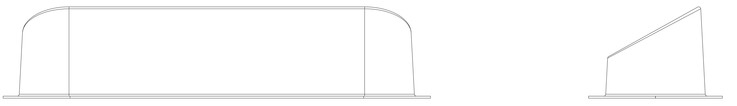

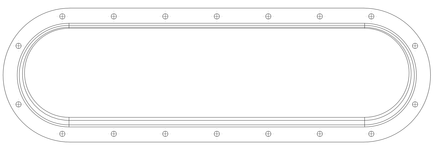

R01SE0755

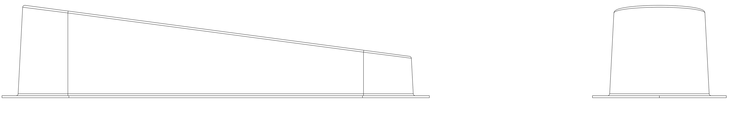

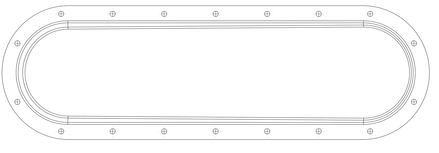

R01SE0756

1:1 100% SCALE