NOTES:

- VOLUME: 17L
- R01SE0718 - AIRBOX 6 CYL RH
- R01SE0717 AIRBOX 6 CYL LH
- DRILL THE FOUR RETAINING CLIP HOLES USING 3 - 10MM DIAMETER STEPPED END MILL
- PUT THE TRIM JIG (R01SE0562-TJ-1) ON THE FACE PLATE AND LOCATE USING THE FOUR PREVIOUS HOLES.

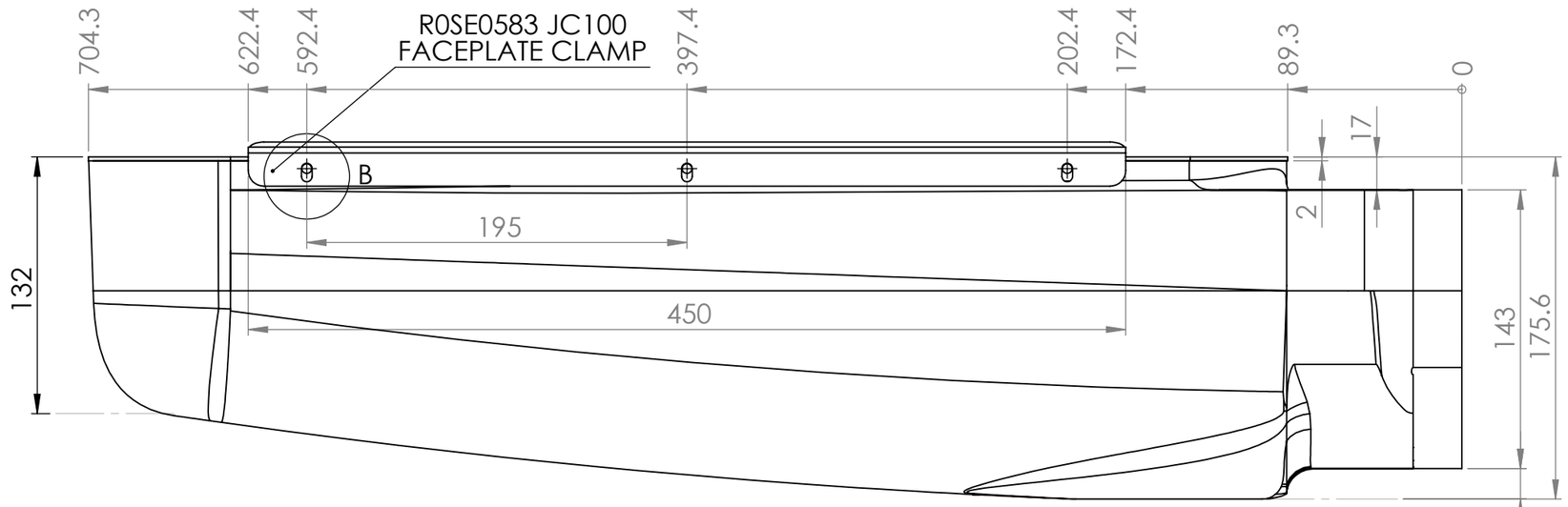

R01SE0718 - RH

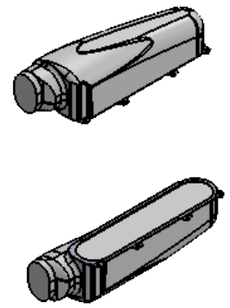

R01SE0717 - LH
(MIRROR OF RH
PART SHOWN
DIMENSIONED)

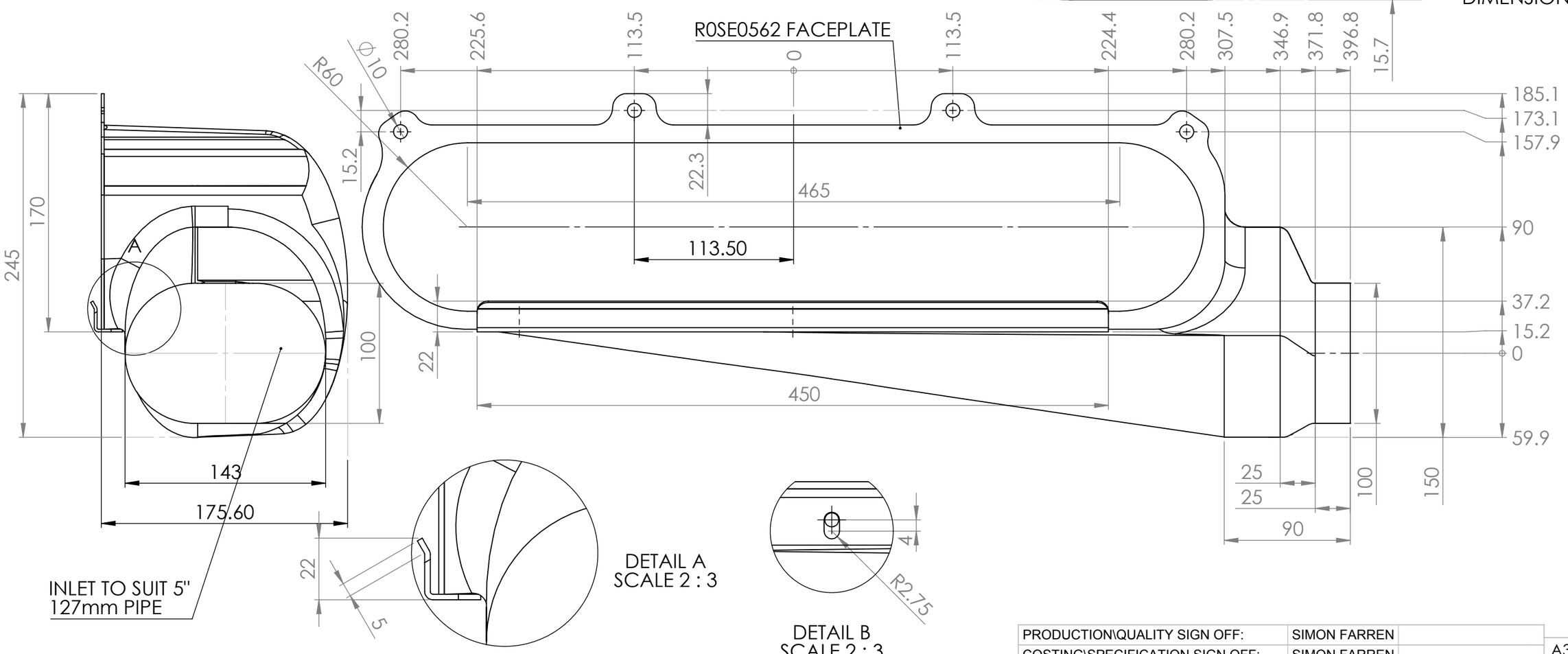

INLET TO SUIT 5"
127mm PIPE

DETAIL A
SCALE 2 : 3

DETAIL B
SCALE 2 : 3

PRODUCTION\QUALITY SIGN OFF:	SIMON FARREN
COSTING\SPECIFICATION SIGN OFF:	SIMON FARREN

A3 SHEET 1 OF 2

ISS:	DESCRIPTION:	INITIALS:	E.C.N. NO:	DATE:
1	Original issue	JC		03/10/2019

ALL DIMENSIONS IN MILLIMETERS

TOLERANCES (AT 20°C) UNLESS OTHERWISE STATED

NOMINAL LINEAR DIMENSIONS		
OVER-INCL	< 0.00	0.00
0-200	+/- 0.50	+/- 0.15
250-1000	+/- 1.00	+/- 0.20
1000 PLUS	+/- 2.00	+/- 0.30

SURFACE FINISHES:
MILLING N8
TURNING N7
GRINDING N6

ANG DIMS
+/- 0.5°

REMOVE ALL BURRS AND SHARP EDGES UNLESS OTHERWISE STATED

HOLES TO BS4500 1985.

THREADS TO BS3643 1981 METRIC COURSE.

BSP THREADS TO BS 2779 MED FIT

THIS A DRAWING IS A PRIVATE AND CONFIDENTIAL COMMUNICATION

REVERIE

Reverie Ltd
Unit 2 Chandlers Row
Colchester
Essex
CO1 2HG
01206 866663
www.reverie.ltd.uk

DRAWN: JC
APP:
DATE: 003/10/2019
FINISH: SEE DRAWING
SCALE: DO NOT SCALE
WEIGHT: -

PART NO(S).: R01SE0717, R01SE0718
TITLE: ZOLDER MACAU 6 CYL MAX JC100 LH/RH
CUSTOMER: N/A
MATERIAL: C/FIBRE
INSPECTION GRADE: A-1
PART QUALITY: B
DRG. NO.: SEE PART NO.S

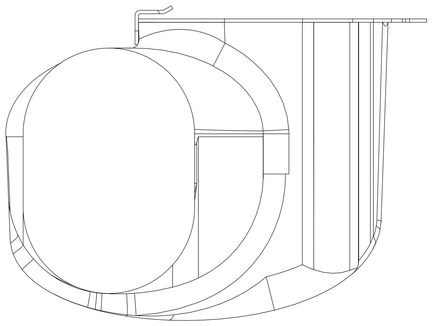

R01SE0717

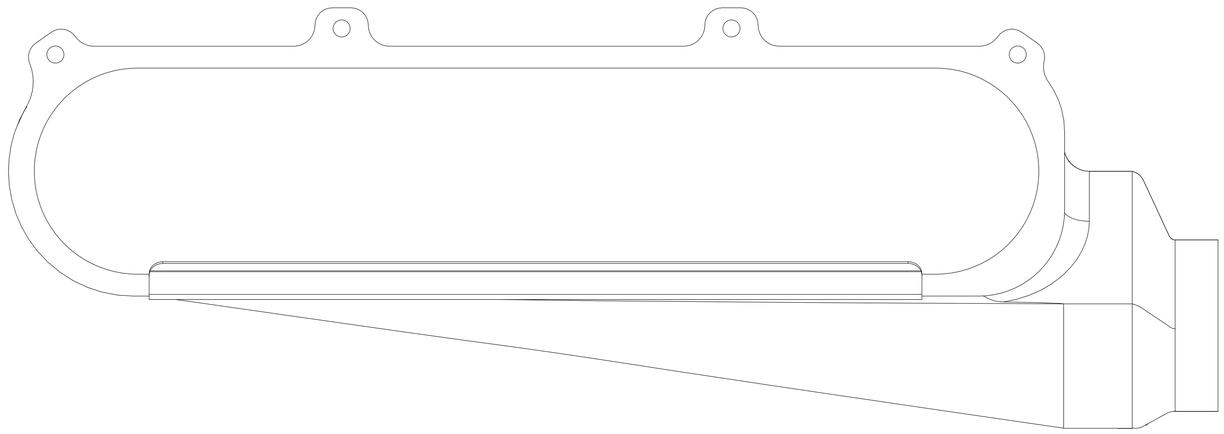

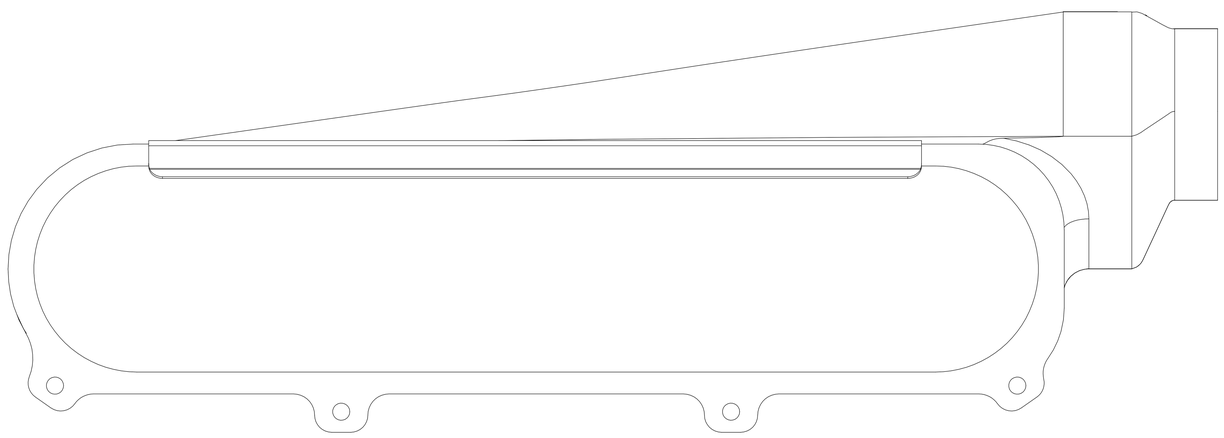

R01SE0718

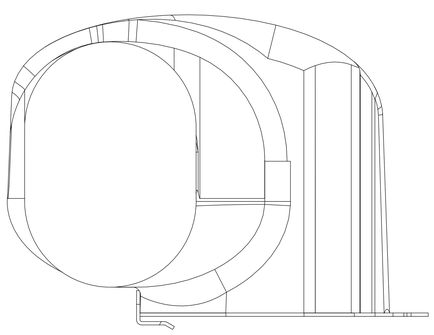

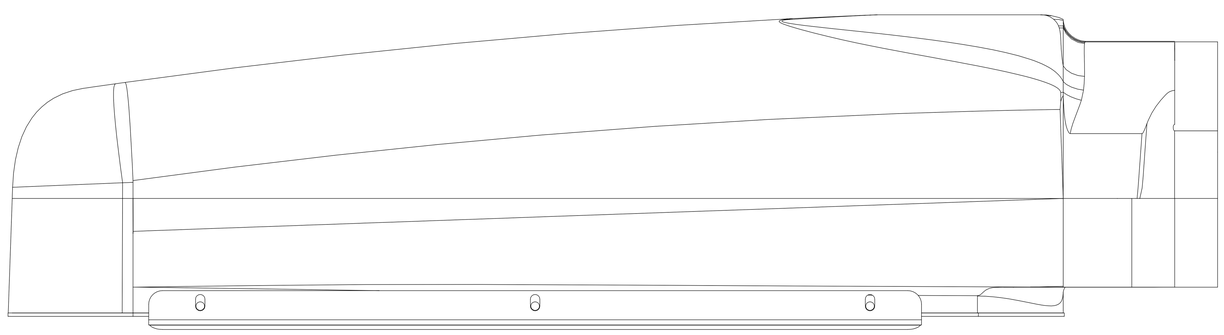

1:1 100% SCALE