NOTES:
- R01SE0429 C/FIBRE 1.6 ~ 2.0mm GLOSS SHEET
- R01SE0449 ALLOY

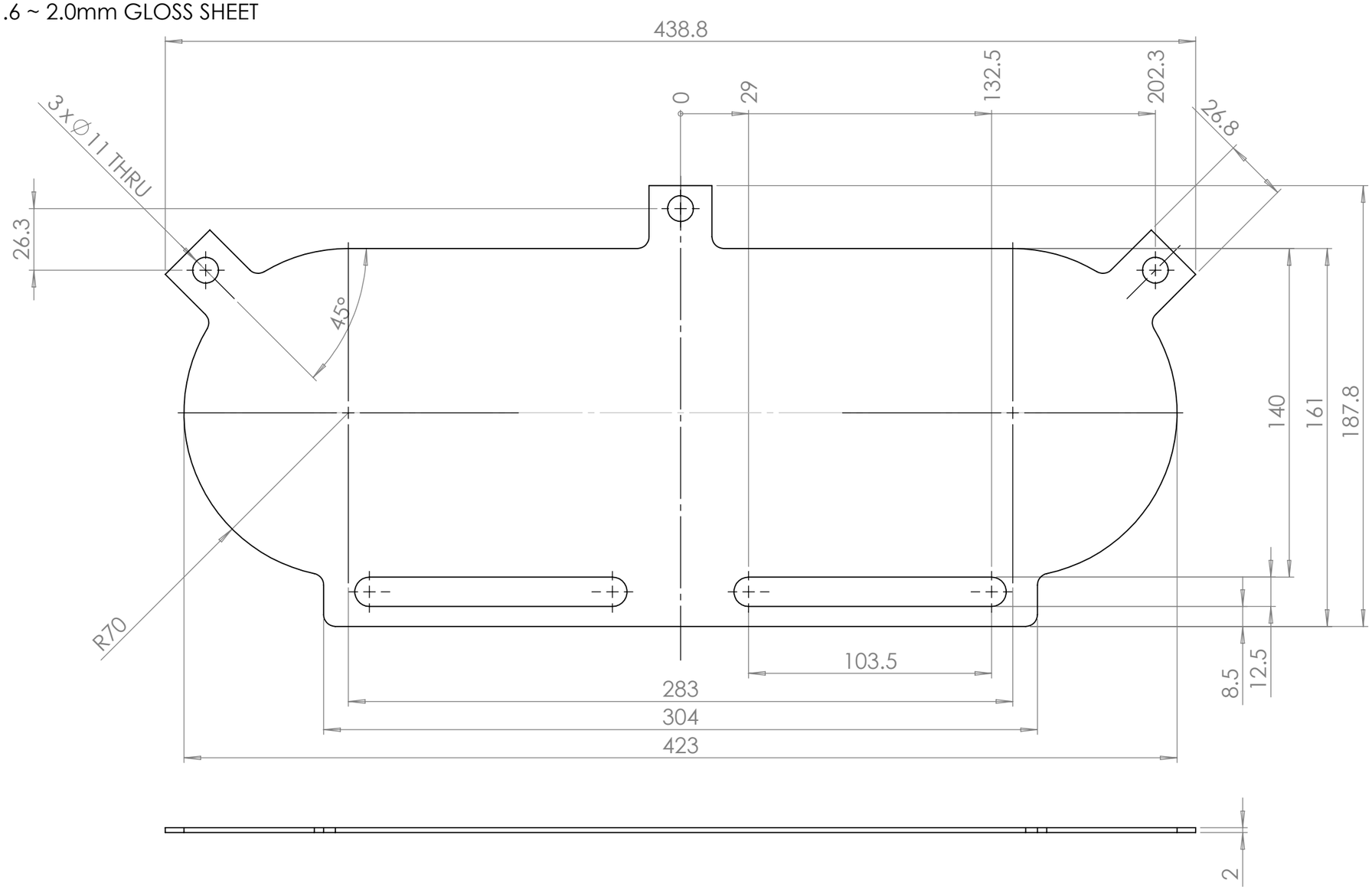

PRODUCTION\QUALITY SIGN OFF:	SIMON FARREN		A3	SHEET 1 OF 2
COSTING\SPECIFICATION SIGN OFF:	SIMON FARREN			

ISS:	DESCRIPTION:	INITIALS:	E.C.N. NO:	DATE:
1	Original issue	AGL		01/01/2002

ALL DIMENSIONS IN MILLIMETERS

TOLERANCES (AT 20°C) UNLESS OTHERWISE STATED

NOMINAL LINEAR DIMENSIONS		
OVER-INCL	< 0.00	0.00
0-200	+/- 0.50	+/- 0.15
250-1000	+/- 1.00	+/- 0.20
1000 PLUS	+/- 2.00	+/- 0.30

SURFACE FINISHES:
MILLING N8
TURNING N7
GRINDING N6

ANG DIMS +/- 0.5'

REMOVE ALL BURRS AND SHARP EDGES UNLESS OTHERWISE STATED

HOLES TO BS4500 1985.

THREADS TO BS3643 1981 METRIC COURSE.

BSP THREADS TO BS 2779 MED FIT

THIS A DRAWING IS A PRIVATE AND CONFIDENTIAL COMMUNICATION

REVERIE

Reverie Ltd
Unit 2 Chandlers Row
Colchester
Essex
CO1 2HG
01206 866663
www.reverie.ltd.uk

DRAWN: AGL
APP:
DATE: 01/01/2002
FINISH: POLISHED
SCALE: DO NOT SCALE
WEIGHT: -

PART NO(S).: R01SE0429 R01SE0449
TITLE: PX600 FLAT ZOLDER BACK PLATE
CUSTOMER: N/A
MATERIAL: SEE SHEET
INSPECTION GRADE: A-1 **PART QUALITY:** B
DRG. NO.: R01SE0429 R01SE0449

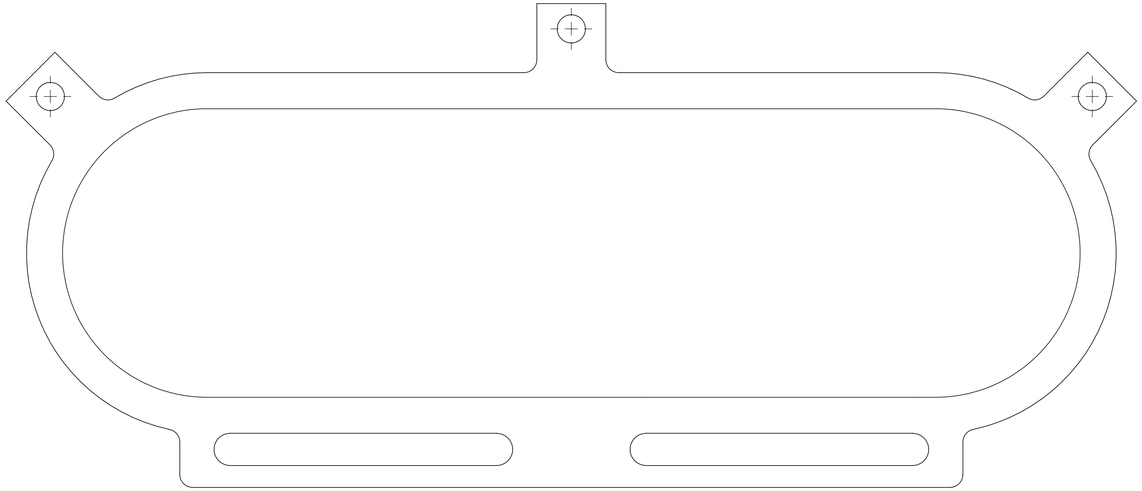

1:1 100% SCALE