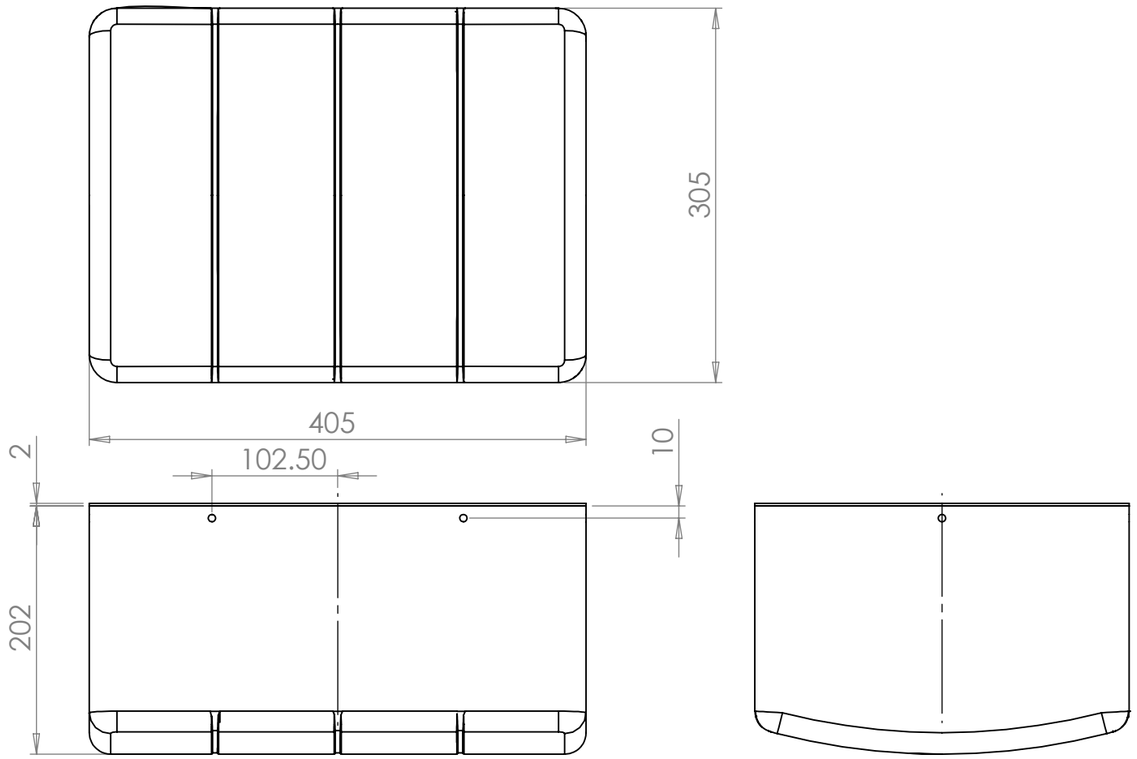

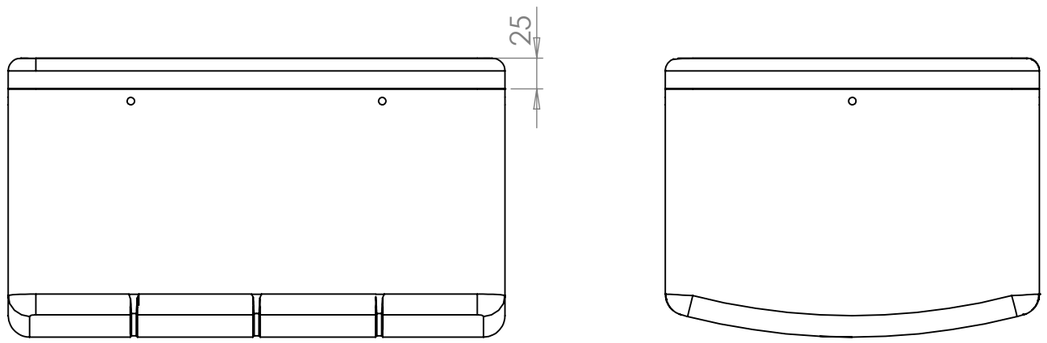

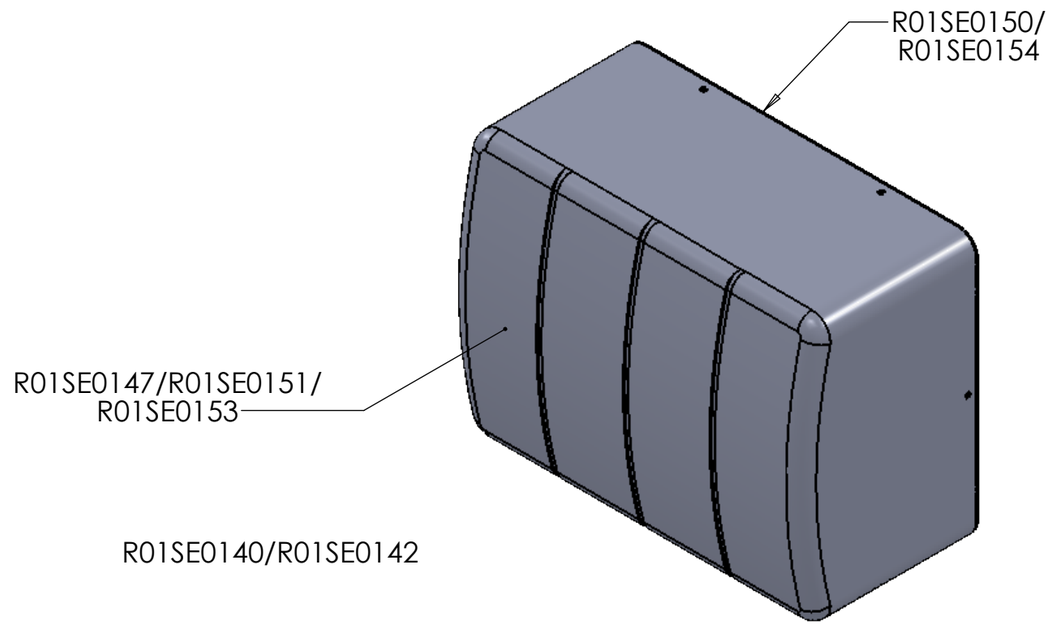

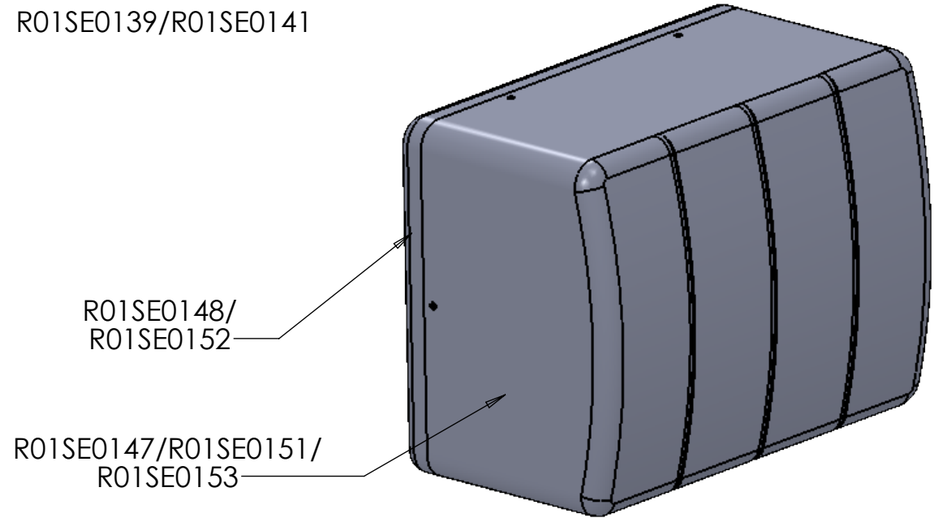

PRODUCTION\QUALITY SIGN OFF:	SIMON FARREN
COSTING\SPECIFICATION SIGN OFF:	SIMON FARREN

A3 SHEET 1 OF 4

ISS:	DESCRIPTION:	INITIALS:	E.C.N. NO:	DATE:
1	Original issue	JC		28/01/2021

ALL DIMENSIONS IN MILLIMETERS

TOLERANCES (AT 20°C) UNLESS OTHERWISE STATED

NOMINAL LINEAR DIMENSIONS		
OVER-INCL	< 0.00	0.00
0-200	+/- 0.50	+/- 0.15
250-1000	+/- 1.00	+/- 0.20
1000 PLUS	+/- 2.00	+/- 0.30

SURFACE FINISHES:

MILLING N8
TURNING N7
GRINDING N6

ANG DIMS +/- 0.5°

REMOVE ALL BURRS AND SHARP EDGES UNLESS OTHERWISE STATED

HOLES TO BS4500 1985.

THREADS TO BS3643 1981 METRIC COURSE.

BSP THREADS TO BS 2779 MED FIT

THIS A DRAWING IS A PRIVATE AND CONFIDENTIAL COMMUNICATION

REVERIE

Reverie Ltd
Unit 2 Chandlers Row
Colchester
Essex
CO1 2HG
01206 866663
www.reverie.ltd.uk

DRAWN: JC
APP:
DATE: 28/01/2021
FINISH: SEE DRAWING
SCALE: DO NOT SCALE
WEIGHT: -

PART NO(S).: R01SE0139, R01SE0140, R01SE0141, R01SE0142
TITLE: HOCKENHEIM 405 AIR BOX KITS
CUSTOMER: REVERIE
MATERIAL: C/FIBRE/GRP
INSPECTION GRADE: A-1 **PART QUALITY:** B
DRG. NO.: N/A

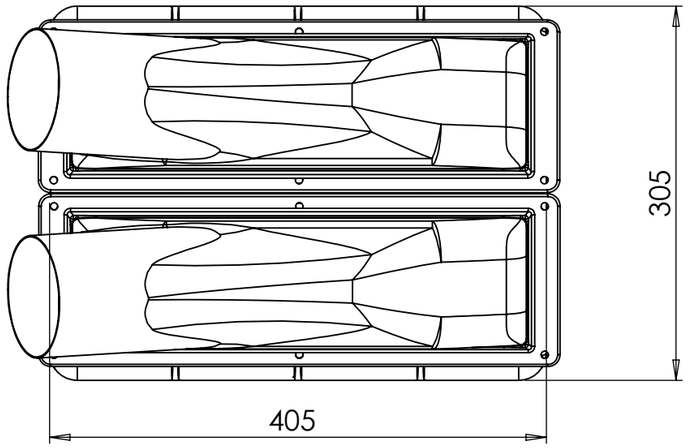

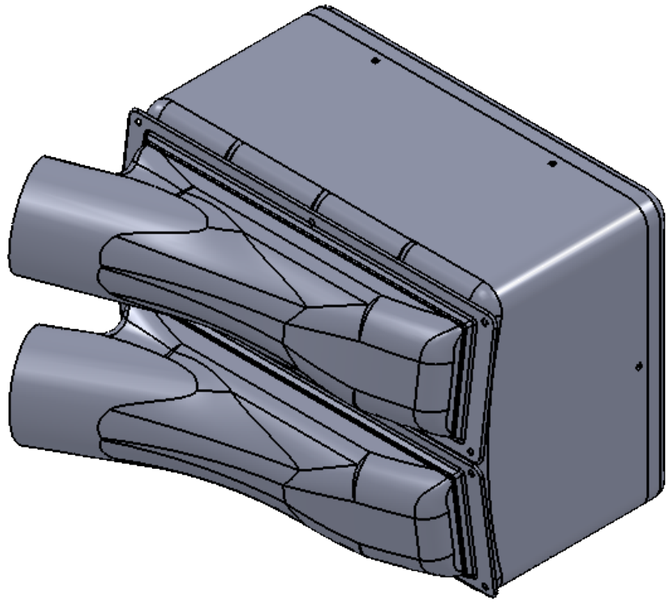

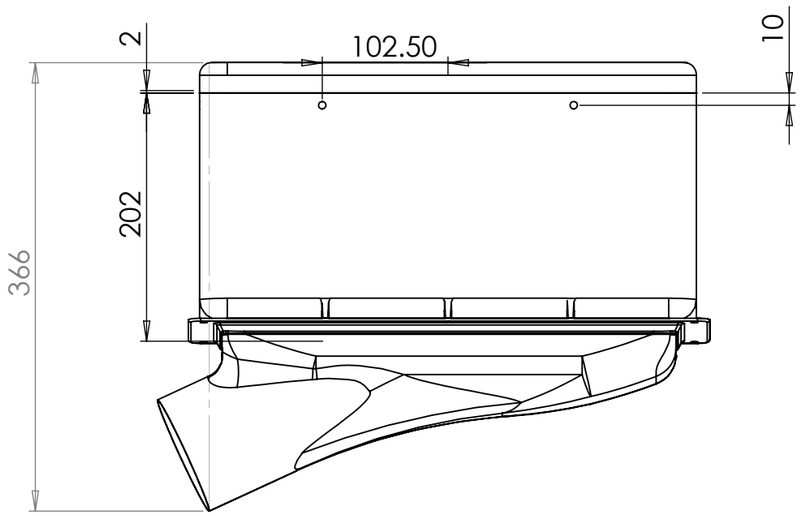

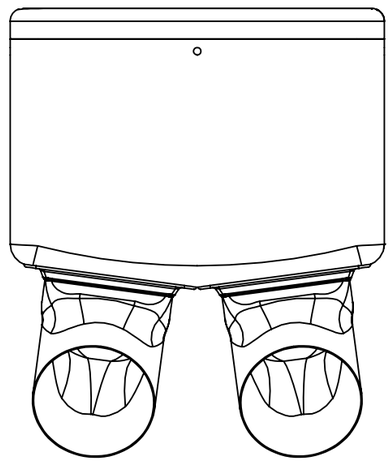

R01SE0452

PRODUCTION\QUALITY SIGN OFF:	SIMON FARREN		A3	SHEET 2 OF 4
COSTING\SPECIFICATION SIGN OFF:	SIMON FARREN			

ISS:	DESCRIPTION:	INITIALS:	E.C.N. NO:	DATE:
1	Original issue	JC		28/01/2021

ALL DIMENSIONS IN MILLIMETERS

TOLERANCES (AT 20°C) UNLESS OTHERWISE STATED

NOMINAL LINEAR DIMENSIONS		
OVER-INCL	< 0.00	0.00
0-200	+/- 0.50	+/- 0.15
250-1000	+/- 1.00	+/- 0.20
1000 PLUS	+/- 2.00	+/- 0.30

SURFACE FINISHES:
MILLING N8
TURNING N7
GRINDING N6

ANG DIMS +/- 0.5'

REMOVE ALL BURRS AND SHARP EDGES UNLESS OTHERWISE STATED

HOLES TO BS4500 1985.

THREADS TO BS3643 1981 METRIC COURSE.

BSP THREADS TO BS 2779 MED FIT

THIS A DRAWING IS A PRIVATE AND CONFIDENTIAL COMMUNICATION

Reverie Ltd
Unit 2 Chandlers Row
Colchester
Essex
CO1 2HG
01206 866663
www.reverie.ltd.uk

DRAWN: JC
APP:
DATE: 28/01/2021
FINISH: SEE DRAWING
SCALE: DO NOT SCALE
WEIGHT: -

PART NO(S).: R01SE0452
TITLE: HOCKENHEIM 405 AIR BOX KITS
CUSTOMER: REVERIE
MATERIAL: C/FIBRE/GRP
INSPECTION GRADE: A-1 **PART QUALITY:** B
DRG. NO.: N/A

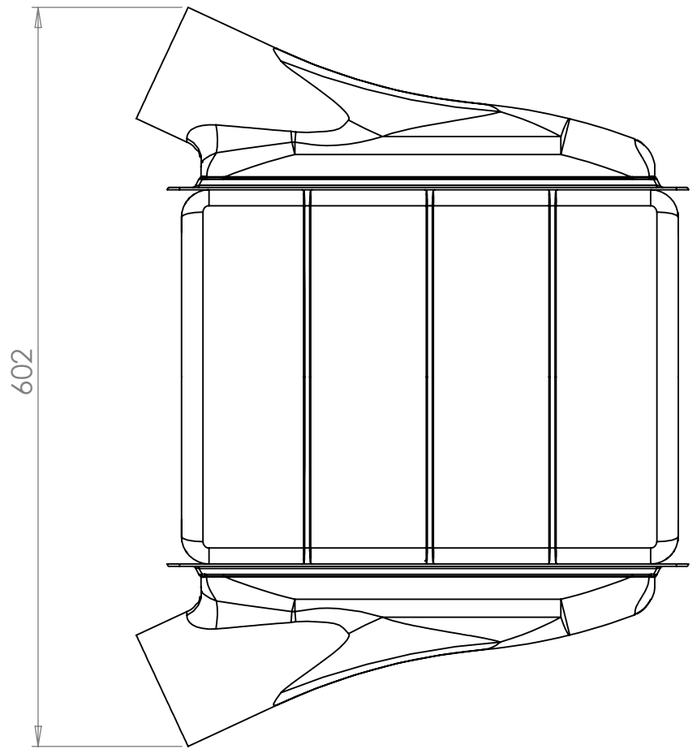

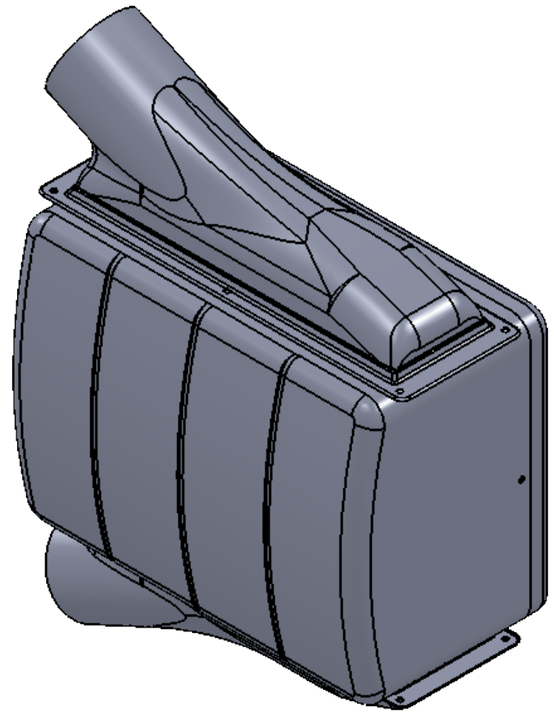

R01SE0453

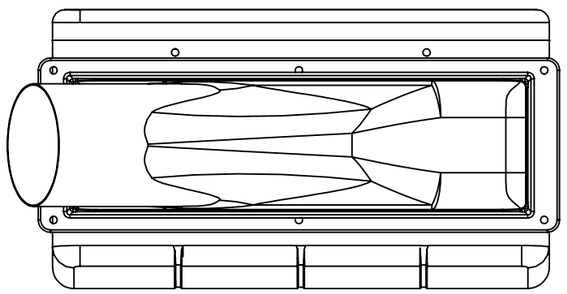

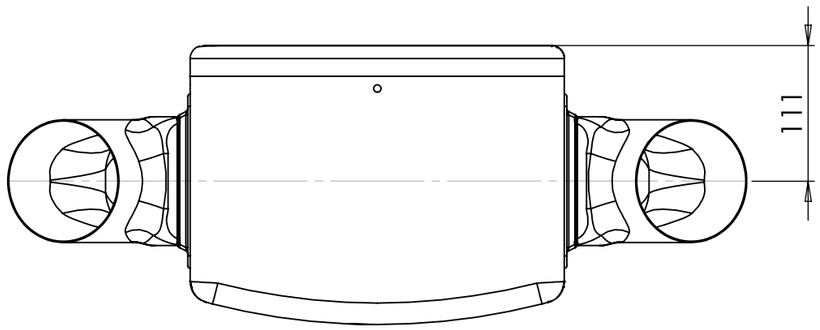

PRODUCTION\QUALITY SIGN OFF:	SIMON FARREN		
COSTING\SPECIFICATION SIGN OFF:	SIMON FARREN	A3	SHEET 3 OF 4

ISS:	DESCRIPTION:	INITIALS:	E.C.N. NO:	DATE:
1	Original issue	JC		28/01/2021

ALL DIMENSIONS IN MILLIMETERS

TOLERANCES (AT 20°C) UNLESS OTHERWISE STATED

NOMINAL LINEAR DIMENSIONS		
OVER-INCL	< 0.00	0.00
0-200	+/- 0.50	+/- 0.15
250-1000	+/- 1.00	+/- 0.20
1000 PLUS	+/- 2.00	+/- 0.30

SURFACE FINISHES:

MILLING N8
TURNING N7
GRINDING N6

ANG DIMS +/- 0.5°

REMOVE ALL BURRS AND SHARP EDGES UNLESS OTHERWISE STATED

HOLES TO BS4500 1985.

THREADS TO BS3643 1981 METRIC COURSE.

BSP THREADS TO BS 2779 MED FIT

THIS A DRAWING IS A PRIVATE AND CONFIDENTIAL COMMUNICATION

REVERIE

Reverie Ltd
Unit 2 Chandlers Row
Colchester
Essex
CO1 2HG
01206 866663
www.reverie.ltd.uk

DRAWN: JC
APP:
DATE: 28/01/2021
FINISH: SEE DRAWING
SCALE: DO NOT SCALE
WEIGHT: -

PART NO(S).: R01SE0453
TITLE: HOCKENHEIM 405 AIR BOX KITS
CUSTOMER: REVERIE
MATERIAL: C/FIBRE/GRP
INSPECTION GRADE: A-1 **PART QUALITY:** B
DRG. NO.: N/A

R01SE0140/R01SE0142

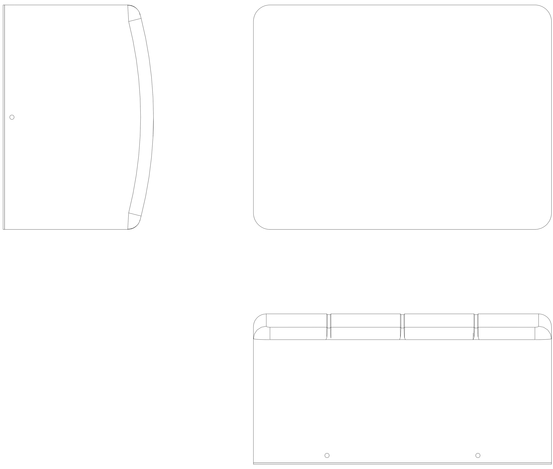

R01SE0139/R01SE0141

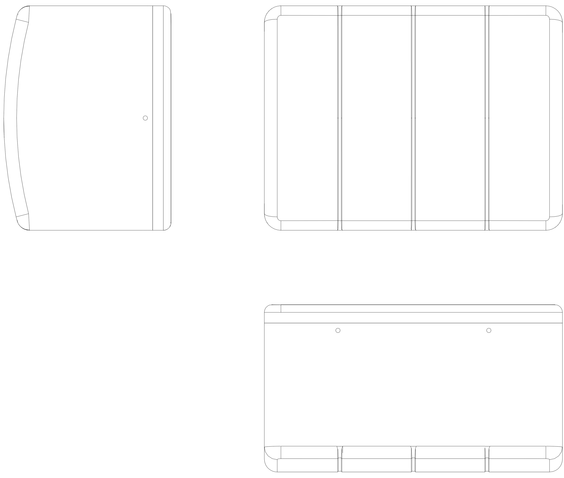

R01SE0452

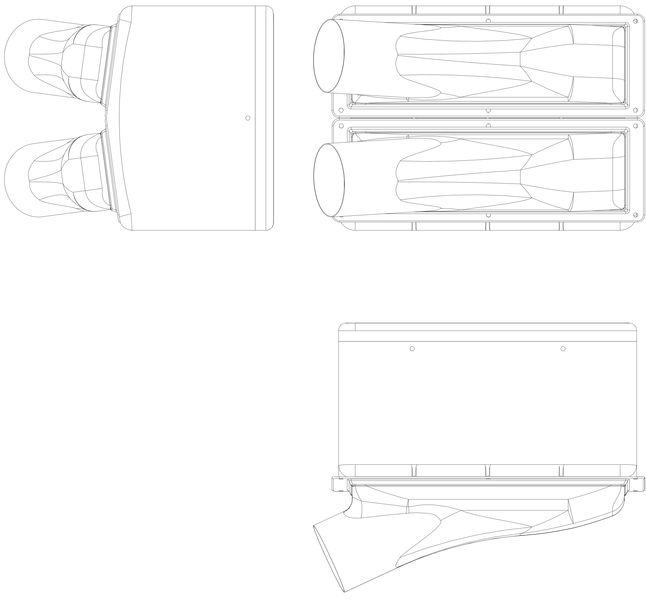

R01SE0453

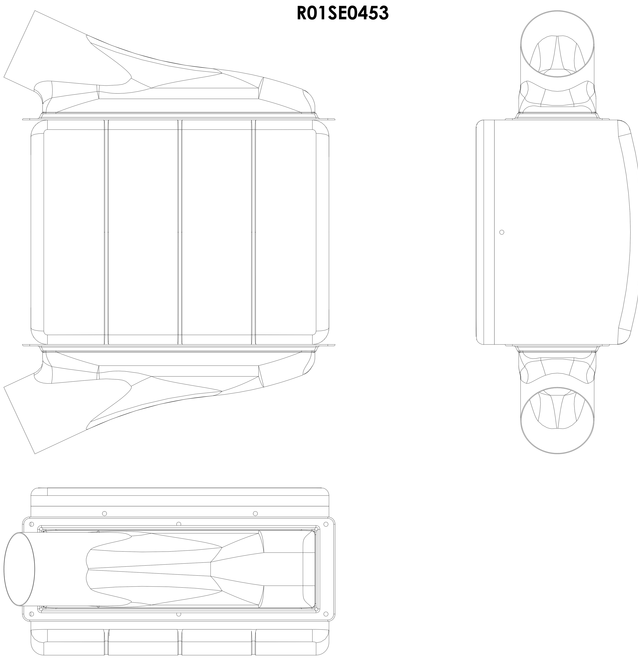

1:1 100% SCALE