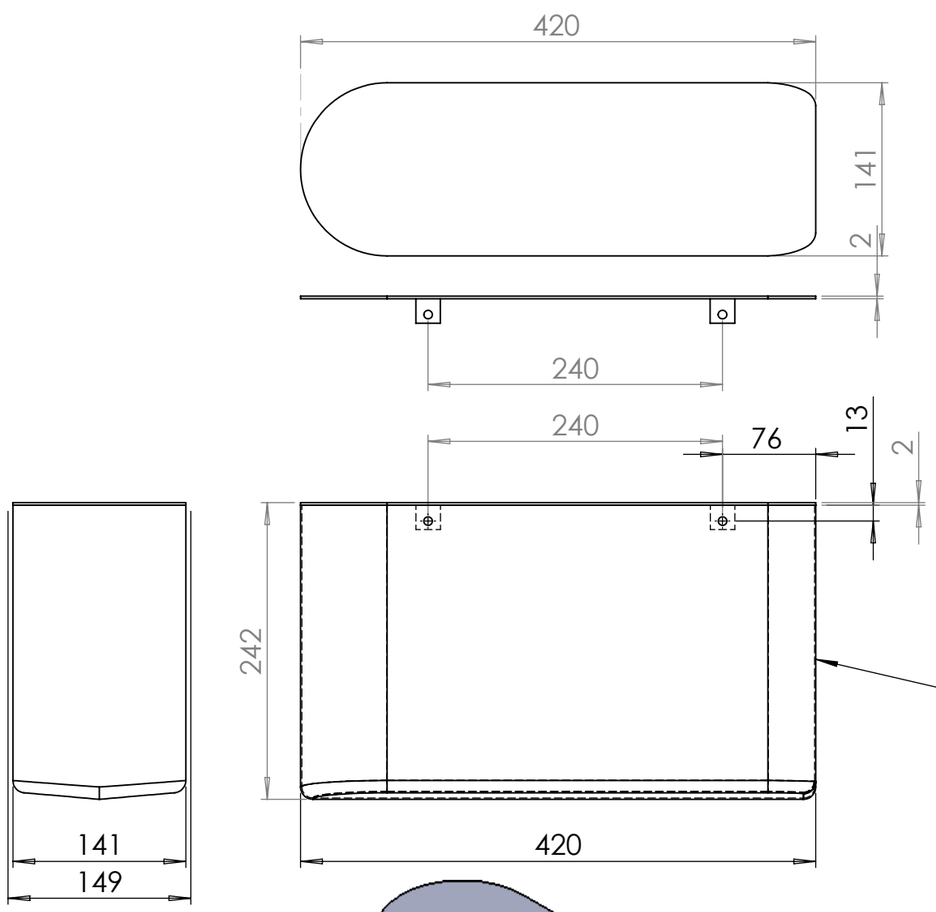

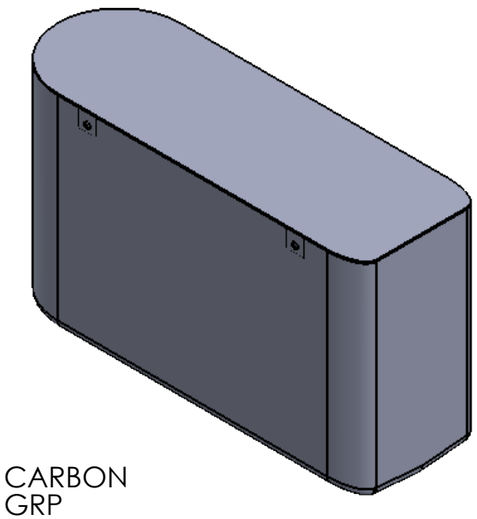

R01SE0077: 422 FLAT B/PLATE CARBON
R01SE0099: 422 FLAT B/PLATE GRP

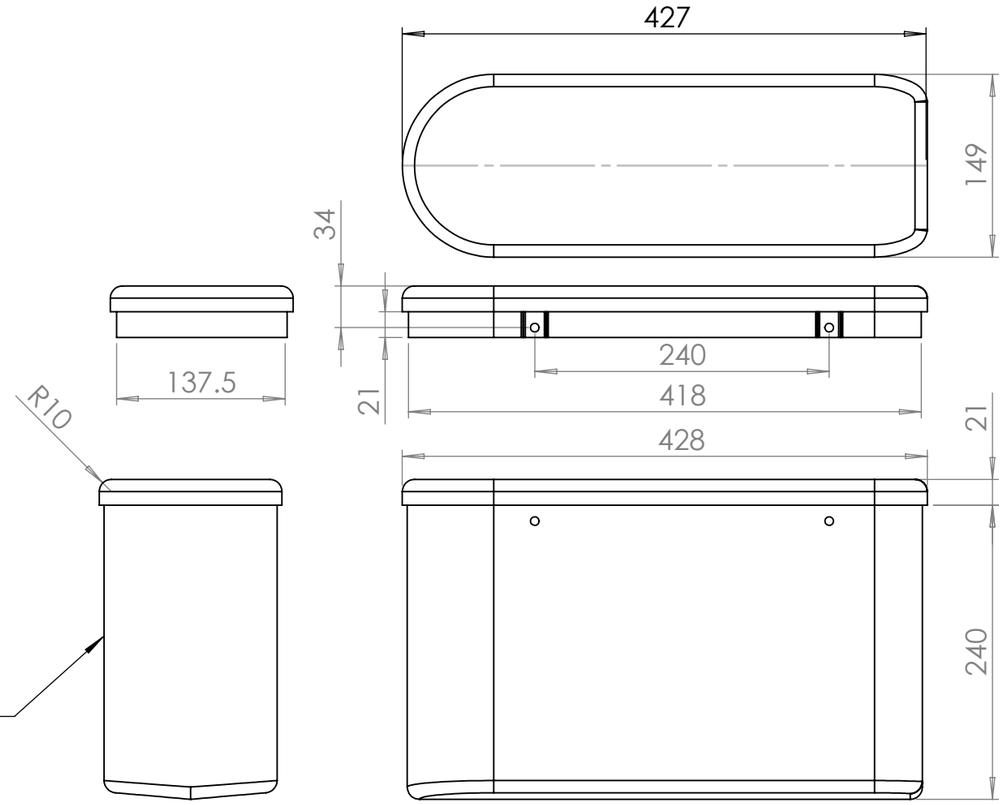

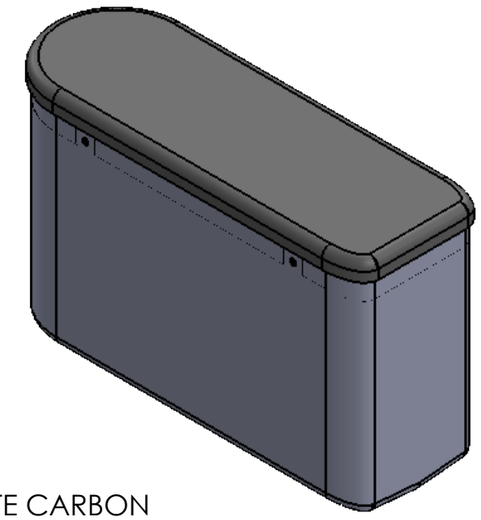

R01SE0033: 422 20mm B/PLATE CARBON
R01SE0090: 422 20mm B/PLATE GRP

PRODUCTION\QUALITY SIGN OFF:	SIMON FARREN		A3	SHEET 1 OF 3
COSTING\SPECIFICATION SIGN OFF:	SIMON FARREN			

ISS:	DESCRIPTION:	INITIALS:	E.C.N. NO:	DATE:
1	Original issue	CA		19/07/2011

ALL DIMENSIONS IN MILLIMETERS

TOLERANCES (AT 20°C) UNLESS OTHERWISE STATED

NOMINAL LINEAR DIMENSIONS		
OVER-INCL	< 0.00	0.00
0-200	+/- 0.50	+/- 0.15
250-1000	+/- 1.00	+/- 0.20
1000 PLUS	+/- 2.00	+/- 0.30

SURFACE FINISHES:

MILLING	N8
TURNING	N7
GRINDING	N6

ANG DIMS
+/- 0.5°

REMOVE ALL BURRS AND SHARP EDGES UNLESS OTHERWISE STATED

HOLES TO BS4500 1985.

THREADS TO BS3643 1981 METRIC COURSE.

BSP THREADS TO BS 2779 MED FIT

THIS A DRAWING IS A PRIVATE AND CONFIDENTIAL COMMUNICATION

Reverie Ltd
Unit 2 Chandlers Row
Colchester
Essex
CO1 2HG
01206 866663
www.reverie.ltd.uk

DRAWN: CA	APP:	**PART NO(S).:** R01SE0033, R01SE0077, R01SE0090, R01SE0099
DATE: 19/07/2011		**TITLE:** HOCKENHEIM 422 AIR BOX WITH FLAT/20mm BACKPLATE
FINISH: SEE DRAWING		**CUSTOMER:** N/A
SCALE: DO NOT SCALE		**MATERIAL:** C/FIBRE/GRP
		INSPECTION GRADE: A-1 **PART QUALITY:** B
WEIGHT: -		**DRG. NO.:** SEE PART NO.S

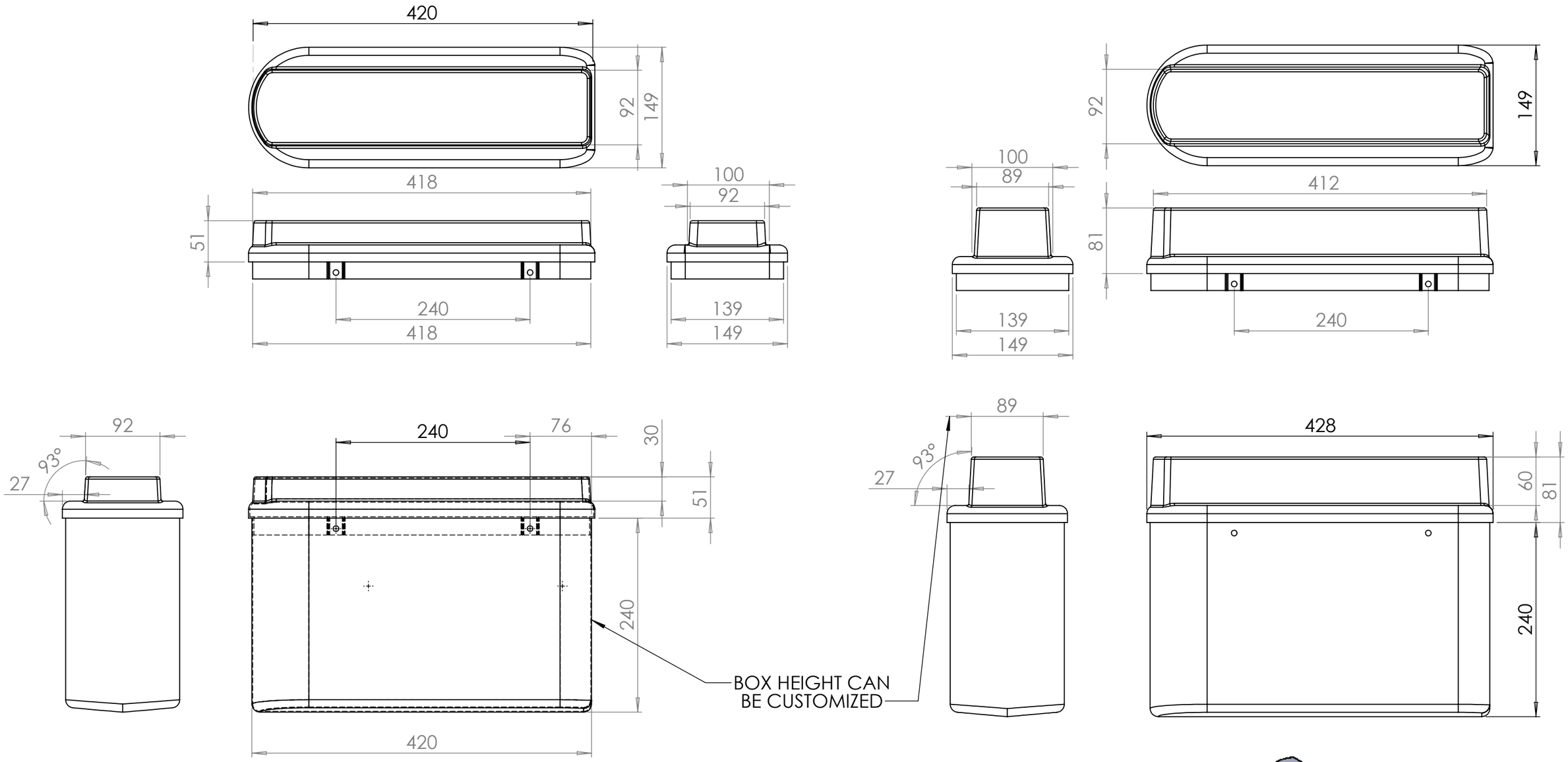

R01SE0719: 422 50mm B/PLATE CARBON
R01SE0721: 422 50mm B/PLATE GRP

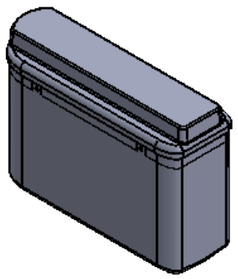

R01SE0720: 422 80mm B/PLATE CARBON
R01SE0722: 422 80mm B/PLATE GRP

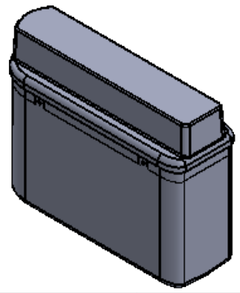

PRODUCTION\QUALITY SIGN OFF:	SIMON FARREN
COSTING\SPECIFICATION SIGN OFF:	SIMON FARREN

A3 SHEET 2 OF 3

ISS:	DESCRIPTION:	INITIALS:	E.C.N. NO:	DATE:
1	Original issue	CA		19/07/2011

ALL DIMENSIONS IN MILLIMETERS

TOLERANCES (AT 20°C) UNLESS OTHERWISE STATED

NOMINAL LINEAR DIMENSIONS		
OVER-INCL	< 0.00	0.00
0-200	+/- 0.50	+/- 0.15
250-1000	+/- 1.00	+/- 0.20
1000 PLUS	+/- 2.00	+/- 0.30

SURFACE FINISHES:

MILLING N8
TURNING N7
GRINDING N6

ANG DIMS +/- 0.5°

REMOVE ALL BURRS AND SHARP EDGES UNLESS OTHERWISE STATED

HOLES TO BS4500 1985.

THREADS TO BS3643 1981 METRIC COURSE.

BSP THREADS TO BS 2779 MED FIT

THIS A DRAWING IS A PRIVATE AND CONFIDENTIAL COMMUNICATION

Reverie Ltd
Unit 2 Chandlers Row
Colchester
Essex
CO1 2HG
01206 866663
www.reverie.ltd.uk

DRAWN: CA
APP:
DATE: 19/07/2011
FINISH: SEE DRAWING
SCALE: DO NOT SCALE
WEIGHT: -

PART NO(S).: R01SE0719, R01SE0720, R01SE0721, R01SE0722
TITLE: HOCKENHEIM 422 AIR BOX WITH 50/80mm BACKPLATE
CUSTOMER: N/A
MATERIAL: C/FIBRE/GRP
INSPECTION GRADE: A-1 **PART QUALITY:** B
DRG. NO.: SEE PART NO.S

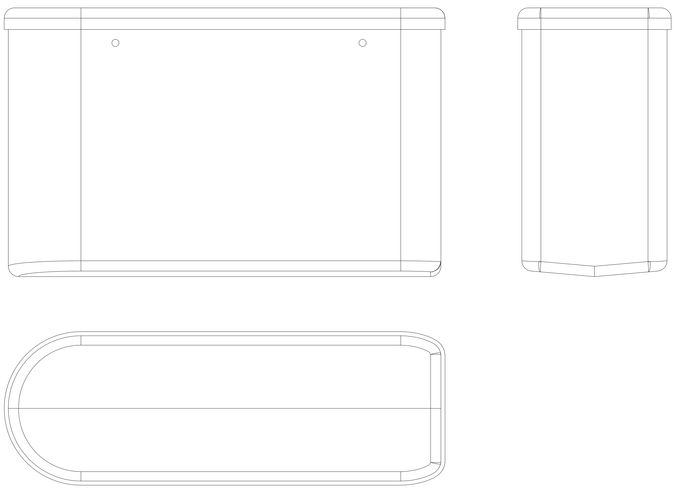

R01SE0033/R01SE0090

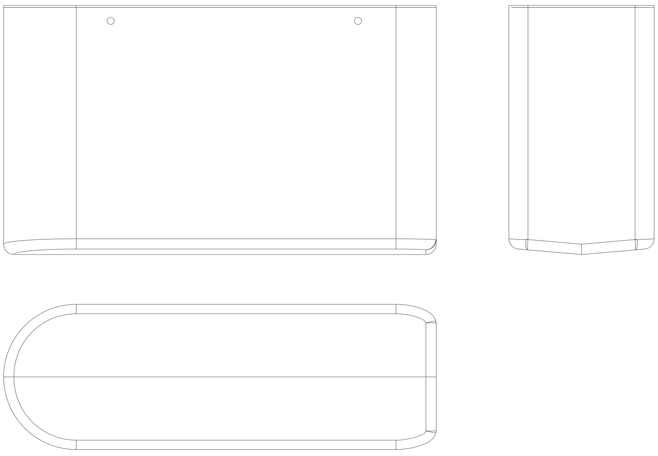

R01SE0077/R01SE0099

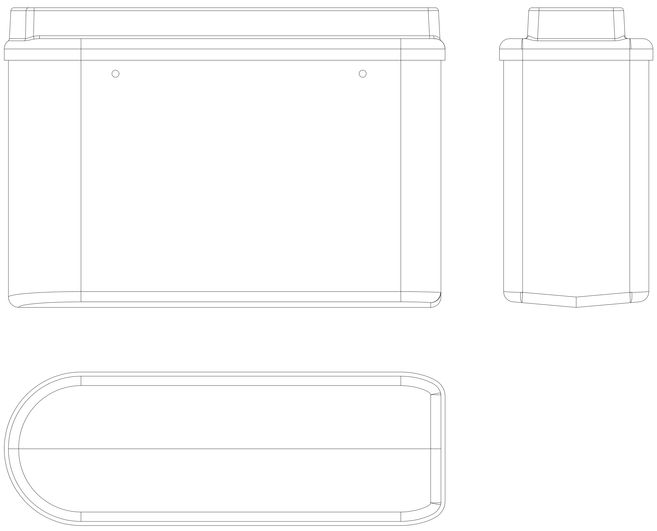

R01SE0719/R01SE0721

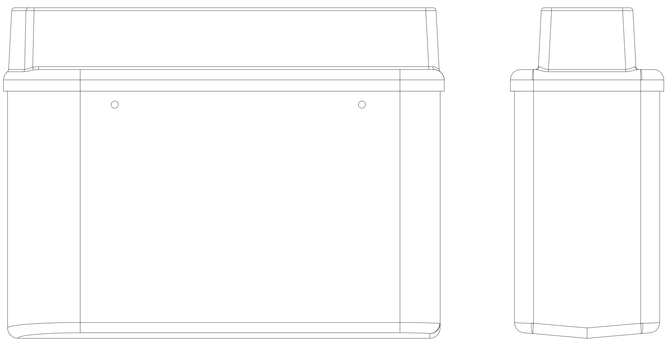

R01SE0720/R01SE0722

1:1 100% SCALE