NOTES:

- MADE FROM R01SB0493T
- MIRRORED VERSION TO BE CREATED USING SAME TOOL
- OUTER PROFILE NOT CRITICAL
- 1:1 SCALE SHEET 2
- SAME AoA SETUP AS R01SB0612

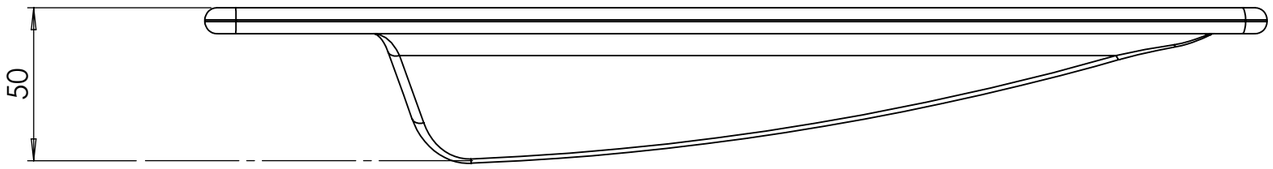

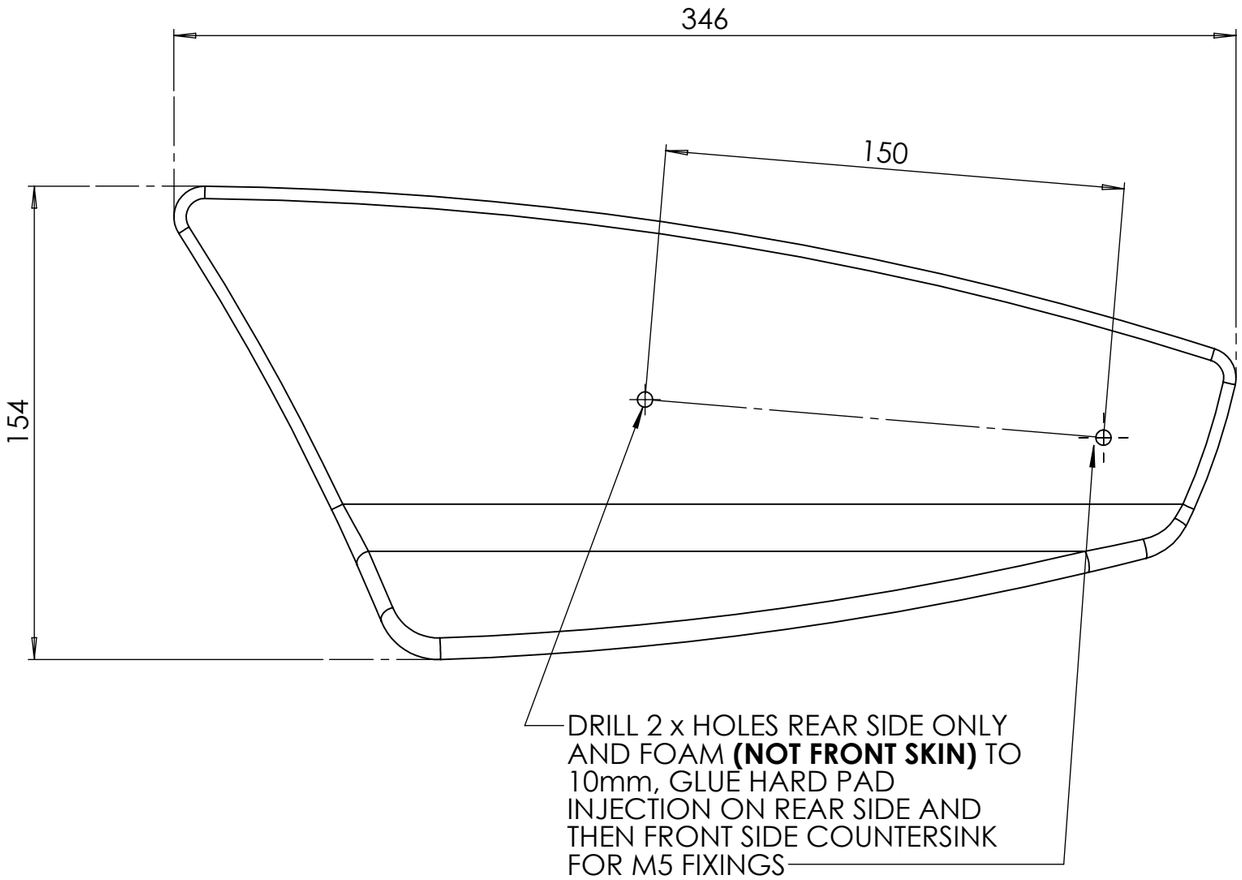

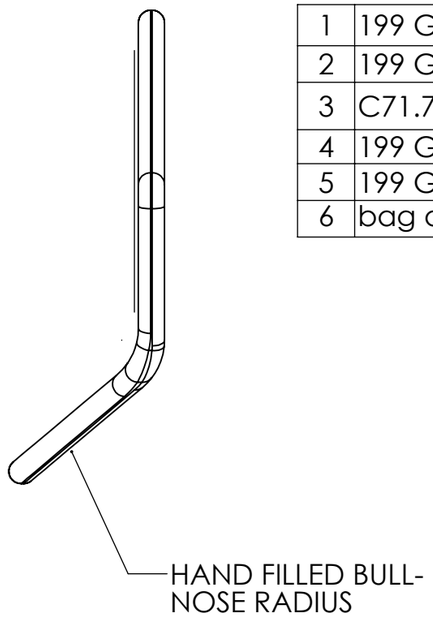

1	199 GSM 2X2 TWIL 0' 46%RW
2	199 GSM 2X2 TWIL 0' 46%RW
3	C71.75 PU Airex foam core 8mm thick
4	199 GSM 2X2 TWIL 0' 46%RW
5	199 GSM 2X2 TWIL 0' 46%RW
6	bag and cure 30-37 psi 120'C

PRODUCTION\QUALITY SIGN OFF:	SIMON FARREN	
COSTING\SPECIFICATION SIGN OFF:	SIMON FARREN	

A3 SHEET 1 OF 2

ISS:	DESCRIPTION:	INITIALS:	E.C.N. NO:	DATE:
1	Original issue	JC		17/06/2021

ALL DIMENSIONS IN MILLIMETERS

TOLERANCES (AT 20°C) UNLESS OTHERWISE STATED

NOMINAL LINEAR DIMENSIONS		
OVER-INCL	< 0.00	0.00
0-200	+/- 0.50	+/- 0.15
250-1000	+/- 1.00	+/- 0.20
1000 PLUS	+/- 2.00	+/- 0.30

SURFACE FINISHES:

MILLING N8
TURNING N7
GRINDING N6

ANG DIMS +/- 0.5°

REMOVE ALL BURRS AND SHARP EDGES UNLESS OTHERWISE STATED

HOLES TO BS4500 1985.

THREADS TO BS3643 1981 METRIC COURSE.

BSP THREADS TO BS 2779 MED FIT

THIS A DRAWING IS A PRIVATE AND CONFIDENTIAL COMMUNICATION

REVERIE

Reverie Ltd
Unit 2 Chandlers Row
Colchester
Essex
CO1 2HG
01206 866663
www.reverie.ltd.uk

DRAWN: JC	APP:	PART NO(S).: R01SB0615
DATE: 17/06/2021		TITLE: 300mm EXIGE S3 430 V6 ANGLED WING ENDPLATE
FINISH: SEE DRAWING		CUSTOMER: N/A
SCALE: DO NOT SCALE		MATERIAL: C/FIBRE
		INSPECTION GRADE: A-1 — PART QUALITY: B
WEIGHT: -		DRG. NO.: R01SB0615

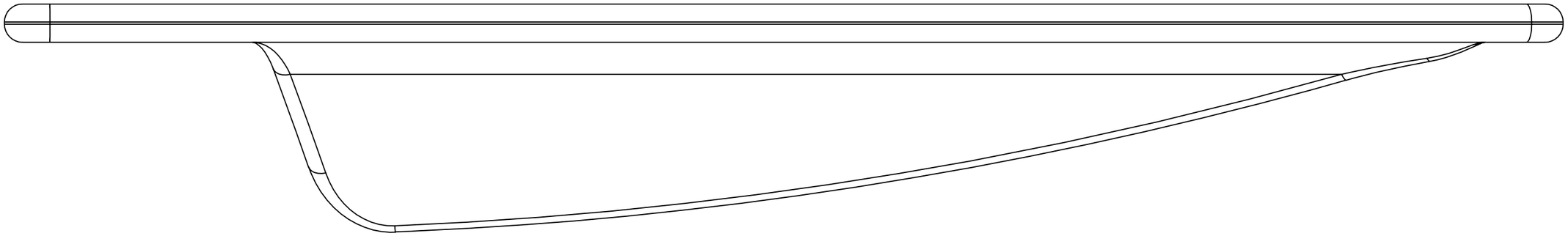
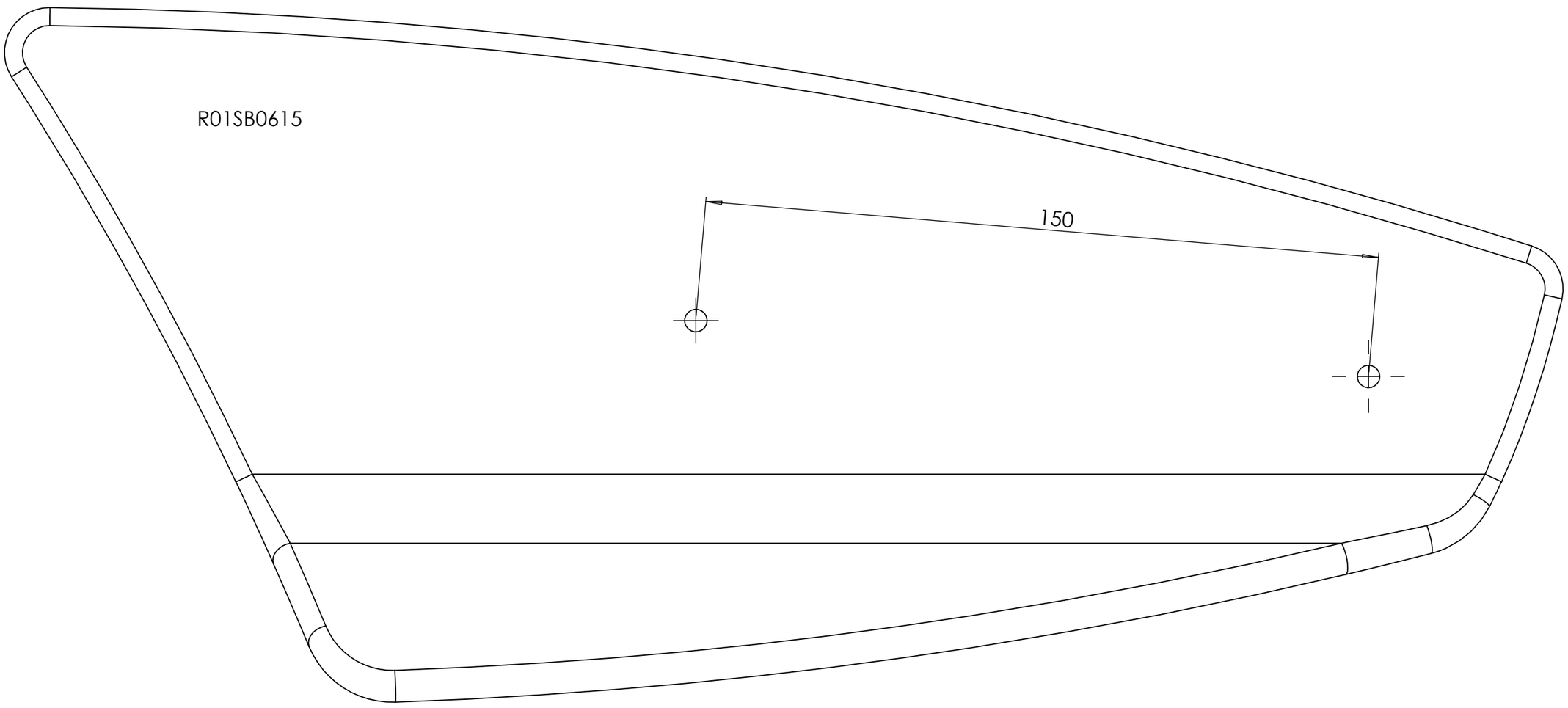
1:1 PRINT A3