TAG	X LOC	Y LOC	SIZE
A1	78.31	124.55	∅6.20 THRU
A2	157.44	134.13	∅6.20 THRU
A3	157.71	117.46	∅6.20 THRU
A4	158.01	125.80	∅6.20 THRU
A5	166.04	137.51	∅6.20 THRU
A6	166.82	118.99	∅6.20 THRU
A7	166.91	128.27	∅6.20 THRU
A8	174.49	141.51	∅6.20 THRU
A9	175.73	131.36	∅6.20 THRU
A10	175.91	121.14	∅6.20 THRU

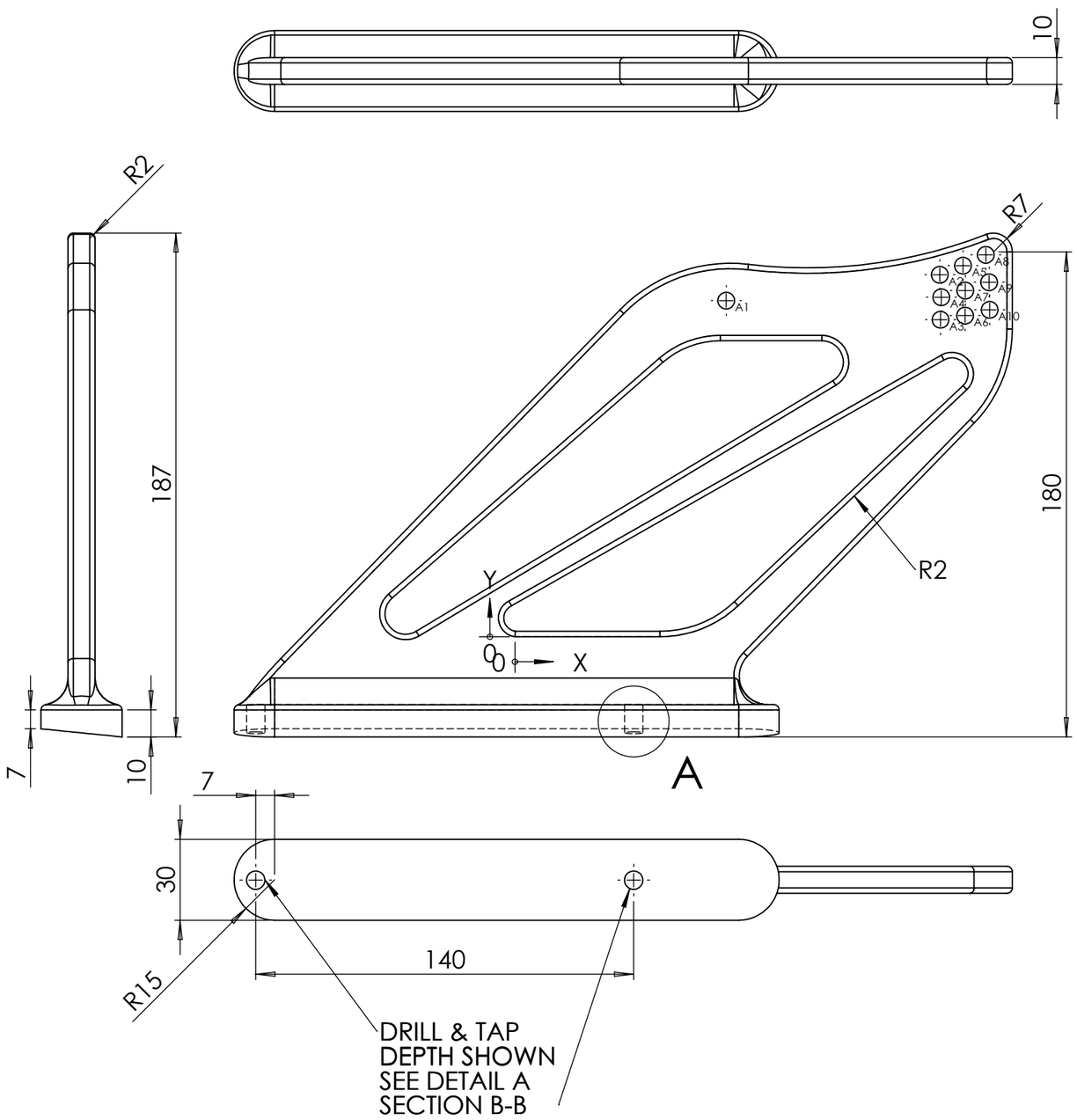

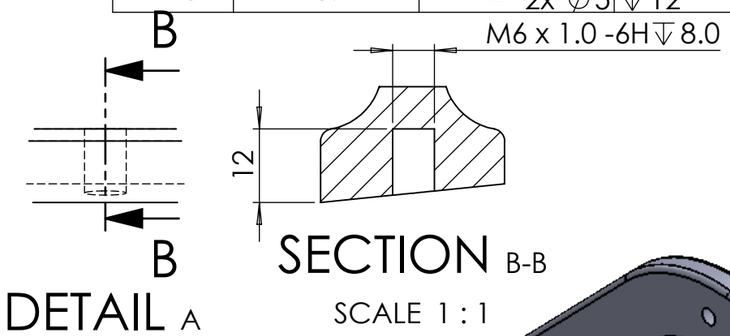

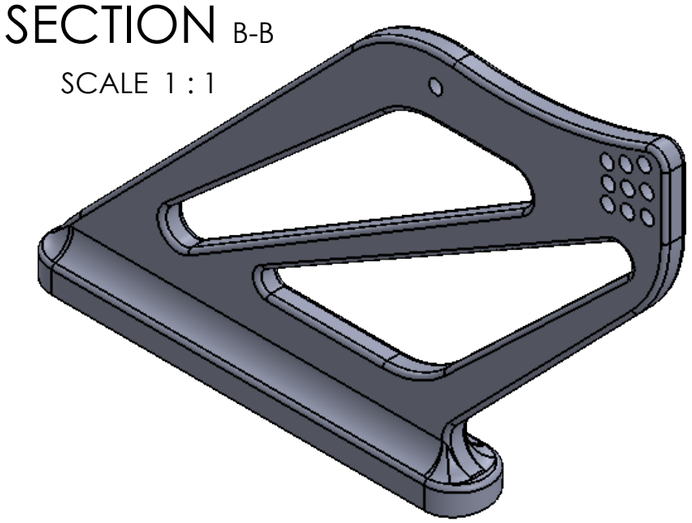

FINISH: DEFLASH AND CNC
MACHINE ALL HOLES
AND UNDERSIDE FOOT TAPER
AND POWDER COAT BLACK

Production\Quality Sign off: Simon Farren

Costing\Specification Sign off: Simon Farren

A3 SHEET 1 OF 1

ISSUE	DESCRIPTION	INITIALS	E.C.N. No	DATE
1	ORIGINAL ISSUE	JC		22/03/2017
2	FLAT TAPER	JC		28/03/2017
3	THICKNESS CHANGE 12mm to 10mm	JC		10/04/2017

ALL DIMENSIONS IN MILLIMETERS

TOLERANCES (AT 20C) UNLESS OTHERWISE STATED

NOMINAL LINEAR DIMENSIONS		
OVER-INCL	<0.00	0.00
0-200	+/- 0.50	+/- 0.20
250-1000	+/- 1.00	+/- 0.20
1000 PLUS	+/- 2.00	+/- 0.30

SURFACE FINISHES
MILLING N8
TURNING N7
GRINDING N6

ANG DIMS +/- 0.5'

REMOVE ALL BURRS AND SHARP EDGES UNLESS OTHERWISE STATED

HOLES TO BS4500 1985.

THREADS TO BS3643 1981 METRIC COURSE.

BSP THREADS TO BS 2779 MED FIT

THIS A DRAWING IS A PRIVATE AND CONFIDENTIAL COMMUNICATION

REVERIE
Reverie Limited
Unit 2 Chandlers Row
Colchester
Essex
CO1 2HG
01206 866663
www.reverie.ltd.uk

DRAWN JC
APP
DATE 10/04/2017
FINISH SEE SHEET
SCALE Do Not Scale Drawing
MASS

PART NUMBER R01SB0501
TITLE LH V6 Exige Tailgate CNC Swepth Wing Mounts
MATERIAL LM25
INSPECTION LEVEL A-1
PART QUALITY GRADE B
DRG. No. R01SB0501-TD