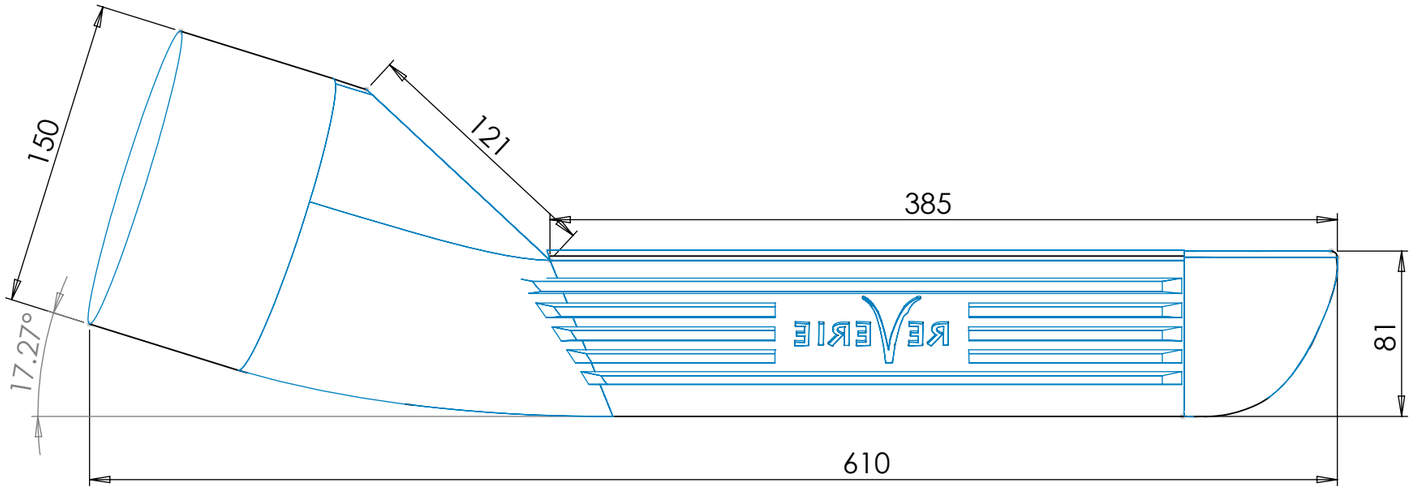

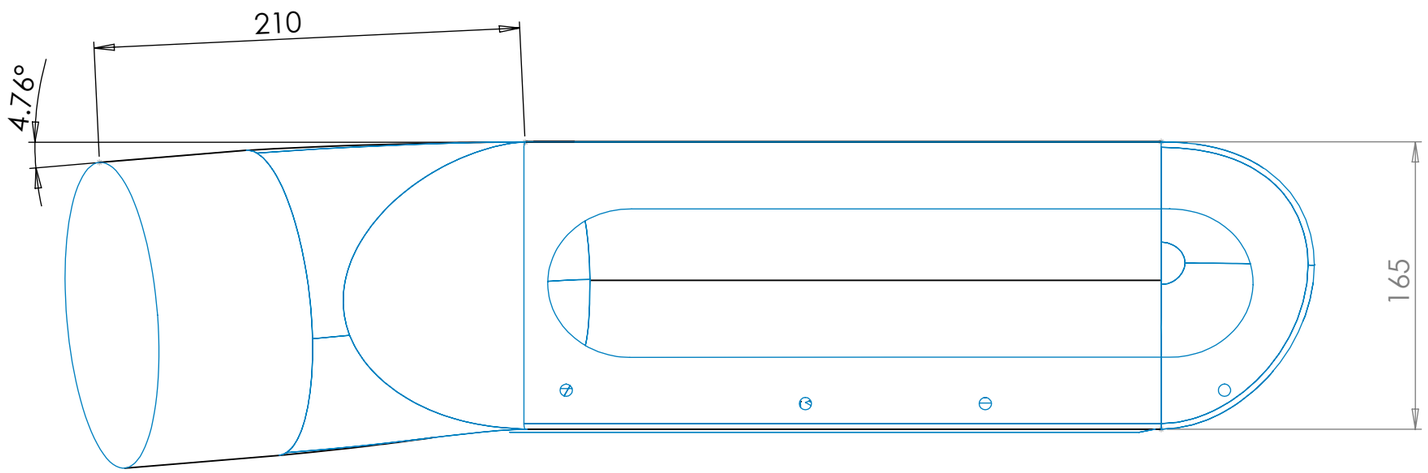

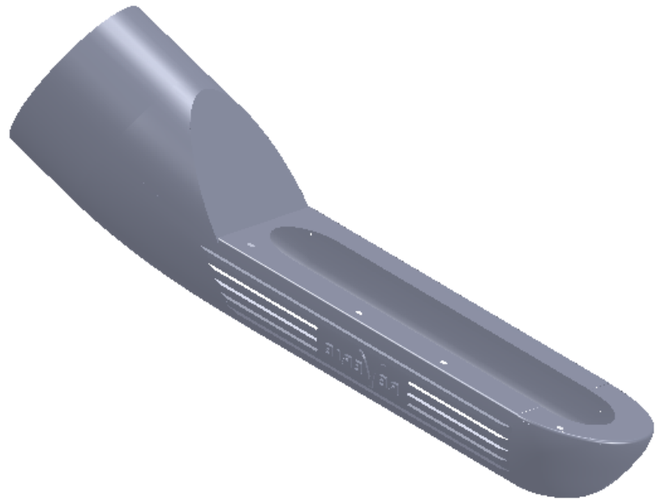

ISSUE	DESCRIPTION	INITIALS	E.C.N. No	DATE
1	ORIGINAL ISSUE	CA		24/06/11

ALL DIMENSIONS IN MILLIMETERS

TOLERANCES (AT 20C) UNLESS OTHERWISE STATED

NOMINAL LINEAR DIMENSIONS

OVER-INCL	<0.00	0.00
0-200	+/- 0.50	+/- 0.15
250-1000	+/- 1.00	+/- 0.20
1000 PLUS	+/- 2.00	+/- 0.30

SURFACE FINISHES
MILLING N8
TURNING N7
GRINDING N6

ANG DIMS +/- 0.5'

REMOVE ALL BURRS AND SHARP EDGES UNLESS OTHERWISE STATED

HOLES TO BS4500 1985.

THREADS TO BS3643 1981 METRIC COURSE.

BSP THREADS TO BS 2779 MED FIT

THIS A DRAWING IS A PRIVATE AND CONFIDENTIAL COMMUNICATION

Reverie Limited
Unit 2 Chandlers Row
Colchester
Essex
CO1 2HG
01206 866663
www.reverie.ltd.uk

DRAWN CA
APP
DATE 24/06/2011
FINISH POLISHED
SCALE DO NOT PRINT TO SCALE
Weight

TITLE SILVERSTONE LH78 AIRBOX R01SE0015
MATERIAL CARBON FIBRE
Matl.Stk Code
DRG. No. R01SE0015